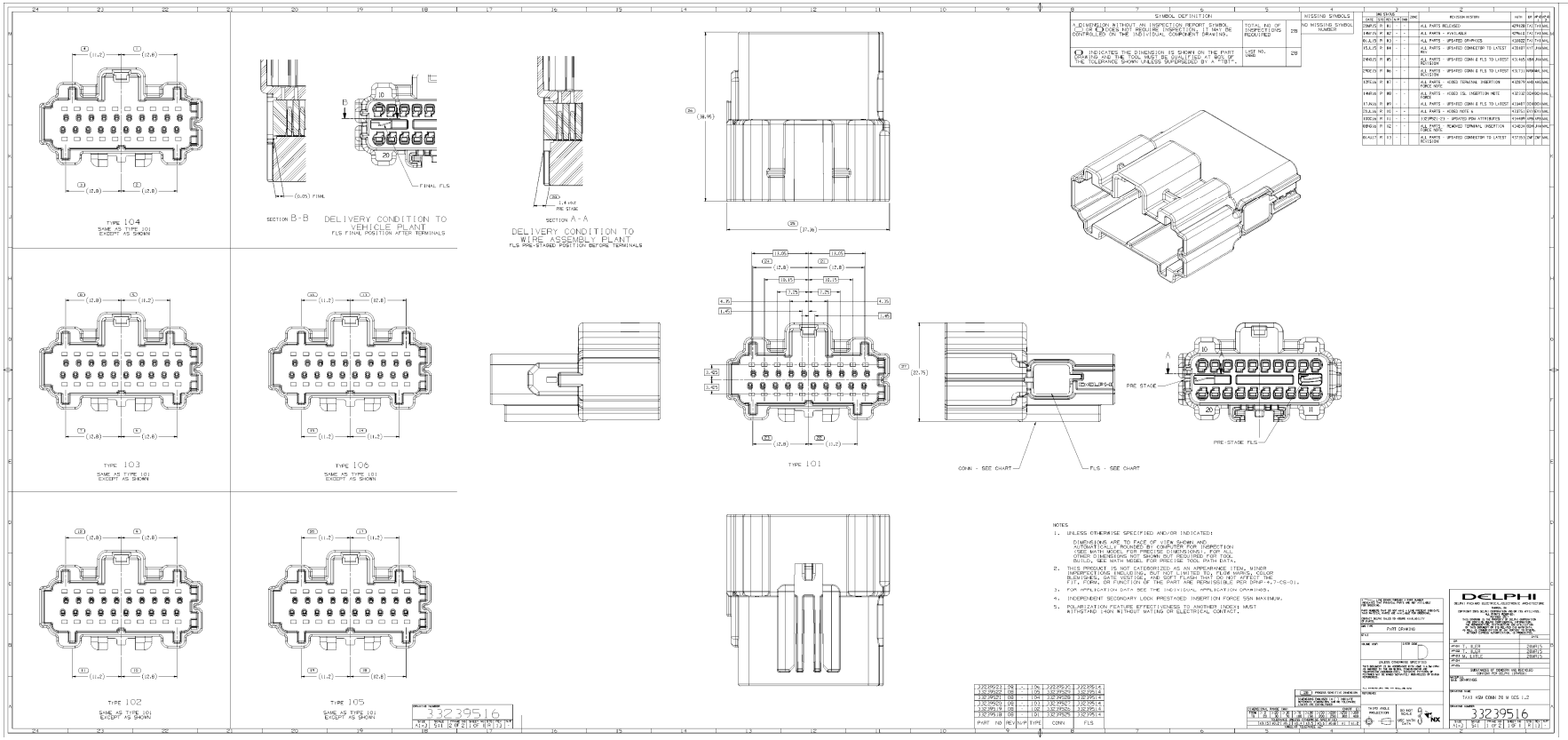


SYMBOL DEFINITION		MISSING SYMBOLS
A (D) MEANS (OR) WITHOUT AN INSPECTION REPORT SYMBOL (SR) OR (D) DOES NOT REQUIRE INSPECTION. IT MAY BE CONTROLLED ON THE INDIVIDUAL COMPONENT DRAWING.	TOTAL NO. OF INSPECTIONS REQUIRED: 28	NO MISSING SYMBOL NUMBER
◇ INDICATES THE DIMENSION IS SHOWN ON THE PART DRAWING AS A BASIC DIMENSION (TED) WITHOUT A TOLERANCE. THE TOLERANCE SHOWN UNLESS SUPERSEDED BY A "FOOT".	LAST NO. USED: 28	

DRG REVISION					REVISION HISTORY	MFR	MP	APVD/DATE
DRAFTS	R	81			ALL PARTS RELEASED	42963	TA	11 JUL
MKTG	P	82			ALL PARTS - AVAILABLE	42963	TA	11 JUL 16
RELEASE	R	83			ALL PARTS - UPDATED DRAWINGS	43082	TA	11 JUL
ELEASE	P	84			ALL PARTS - UPDATED CONNECTOR TO LATEST REV	43167	TA	11 AUG
ENGR	P	85			ALL PARTS - UPDATED CONN & FLS TO LATEST REVISION	43166	KM	11 AUG
PROD	P	86			ALL PARTS - UPDATED CONN & FLS TO LATEST REVISION	43171	MM	11 AUG
ERELEASE	P	87			ALL PARTS - ADDED TERMINAL INSERTION FORCE NOTE	43287	KM	11 AUG
ENGR	P	88			ALL PARTS - ADDED ISL INSERTION MATE FORCE	43232	DZ	11 AUG
RELEASE	R	89			ALL PARTS - UPDATED CONN & FLS TO LATEST REVISION	43387	DD	11 AUG
RELEASE	P	90			ALL PARTS - ADDED NOTE 4	43372	LW	11 AUG
RELEASE	P	91			12289231 - UPDATED PDM ATTRIBUTES	43498	VPM	11 AUG
RENGR	P	92			ALL PARTS - REMOVED TERMINAL INSERTION FORCE	43424	KM	11 AUG
RELEASE	R	93			ALL PARTS - UPDATED CONNECTOR TO LATEST REVISION	43535	DP	11 SEP

NOTES
1. UNLESS OTHERWISE SPECIFIED AND/OR INDICATED:
   DIMENSIONS ARE TO FACE OF VIEW SHOWN AND AUTOMATICALLY MEASURED BY COMPUTER FOR INSPECTION (SEE MATH MODEL FOR PRECISE DIMENSIONS). FOR ALL OTHER DIMENSIONS, NOT SHOWN BUT REQUIRED FOR TOOL DESIGN, USE THE NOMINAL VALUE FROM THE MATH MODEL.
2. THIS PRODUCT IS NOT CATEGORIZED AS AN APPEARANCE ITEM. MINOR IMPERFECTIONS SUCH AS SCRATCHES, DUSTING, SLIGHT VARIATION IN MOLD COLOR, BLEMISHES, GATE VESTIGE, AND SOFT FLASH THAT DO NOT AFFECT THE FIT, FORM, OR FUNCTION OF THE PART ARE PERMISSIBLE PER DFMP-4,7-CS-01.
3. FOR APPLICATION DATA SEE THE INDIVIDUAL APPLICATION DRAWINGS.
4. INDEPENDENT SECONDARY LOCK PRESTAGED INSERTION FORCE 55N MAXIMUM.
5. POLARIZATION FEATURE EFFECTIVENESS TO ANOTHER INDEX MUST WITHSTAND 140N WITHOUT MATING OR ELECTRICAL CONTACT.

PART NO	REV	NUM	TYPE	CONN	FLS
12289231	06	-	104	12289230	12289514
12289232	06	-	103	12289230	12289514
12289233	06	-	102	12289230	12289514
12289234	06	-	101	12289230	12289514
12289235	06	-	106	12289230	12289514
12289236	06	-	105	12289230	12289514

DELPHI
DELPHI PACKARD ELECTRICAL/ELECTRONIC ARCHITECTURE
CAGE CD
COPYRIGHT 2010, DELPHI PACKARD ELECTRIC SYSTEMS, WARREN, OH
UNPUBLISHED WORK. ALL RIGHTS RESERVED.
THIS DOCUMENT CONTAINS CONFIDENTIAL AND PROPRIETARY INFORMATION OF DELPHI PACKARD ELECTRIC SYSTEMS. ANY REPRODUCTION, DISCLOSURE OR USE WITHOUT THE EXPRESS WRITTEN PERMISSION OF DELPHI PACKARD ELECTRIC SYSTEMS IS PROHIBITED.

APVD	DATE	
PART DRAWING		
SIZE	CODE IDENT	
UNLESS OTHERWISE SPECIFIED		
APVD 1 - 8.09	DGB115	
APVD 2 - 8.09	DGB115	
APVD 3 - 11.11.11	DGB115	
APVD		
APVD		
SUBSTITUTED AT PRODUCTION RELEASED VERSION PLOTTING (SHEET)		
NEXT ASSY		
USED ON (DRAWING)		
NEXT ASSY		
REVISED TO BE		
TX33 HSM CONN 26 M SRS 1.2		
REVISED NUMBER		
33239516		
SIZE	CAGE CODE	DRAWING NO.
A3	561	33239516
SCALE	WEIGHT	SHEET
1:1		1 OF 2
NEXT ASSY	USED ON	
APPLICATION	DO NOT SCALE DRAWING	

| | | | | |