SYMBOL DEFINITION		
A DIMENSION WITHOUT AN INSPECTION REPORT SYMBOL (□) DOES NOT REQUIRE INSPECTION. IT MAY BE CONTROLLED ON THE INDIVIDUAL COMPONENT DRAWING.	TOTAL NO OF INSPECTIONS REQUIRED	9
	LAST NO. USED	7

MISSING SYMBOLS
NO MISSING SYMBOL NUMBER

DWG STATUS DATE	STS	REC	N/P	DIB	ZONE	REVISION HISTORY	AUTH	DR	APVD 1	APVD 2
12JL02	R	A4	-	-		REDRAWN TO PO, UPDATED MAT'L SPEC & UPDATED PCM ATTRIBUTES	227760	EES	EES	FR
22APR03	R	A5	-	-		ADDED DELPHI LOGO NOTE & RECYCLING CODE NOTE AND REVISED GRAPHICS	239286	RH	RH	FR
12NV03	R	A6	-	-		ADDED OPTIONAL CONSTRUCTION & NOTE	240618	CVJ	RDG	FR
29JL03	R	B2	-	-		MAT'L SPEC WAS M3661002	243733	GBR	GBR	ET
13AU03	R	B2	AA	-		5.84 +0.25/-0.15 WAS 5.84 AND ADDED NOTE	244514	MRA	MRA	FR
28APL7	R	B2	AB	-		UPDATED DESIGN & ENGINEERING CONTROL AND ADDED NOTE	436484	JVR	JVR	JTS

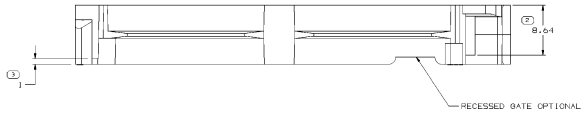

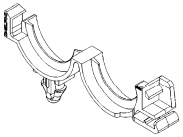

SCALE 2:1

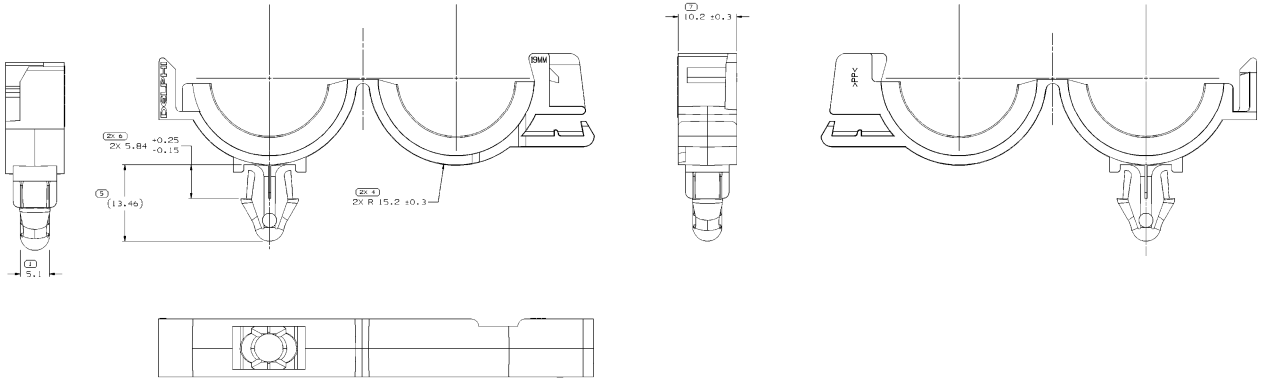

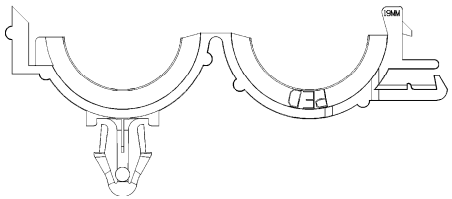

OPTIONAL CONSTRUCTION

NOTES

1. UNLESS OTHERWISE SPECIFIED AND/OR INDICATED: DIMENSIONS ARE TO FACE OF VIEW GROWN AND AUTOMATICALLY ROUNDED BY COMPUTER FOR INSPECTION (SEE MATH MODEL FOR PRECISE DIMENSIONS). FOR ALL OTHER DIMENSIONS NOT SHOWN BUT REQUIRED FOR TOOL BUILD, SEE MATH MODEL FOR PRECISE TOOL PATH DATA.
2. MATERIAL RECYCLING CODE >PPK< PER SAE J1344. (1)X(0.1) RAISED CHARACTERS AS SHOWN TO BE LOCATED ON ANY EXTERIOR SURFACE. OPTIONAL CONSTRUCTION TO BE NO MATERIAL RECYCLING CODE.
3. (1)X(0.1) RAISED DELPHI CORPORATE BRAND TO BE LOCATED ON ANY EXTERIOR SURFACE, PREFERABLY VISIBLE AT FINAL ASSEMBLY. OPTIONAL CONSTRUCTION TO BE "PRED" OR NO LOGO.
4. THIS PART TO FIT 19.05 (.750") I.D. CONVOLUTED CONDUIT.
5. RECOMMENDED HOLE SIZE FOR CLIP 6.1-6.6 DIA HOLE IN 3.8 MAX THICK STOCK.
6. EJECTOR PADS OPTIONAL AND APPROXIMATELY AS SHOWN.

THE DESIGN AND ENGINEERING CONTROL OF THIS COMPONENT HAS BEEN TRANSFERRED TO DELPHI/HELLERMANNTYTON

THE DRAWING TITLE(S) & DOW NUMBER (IF ASSIGNED) THAT PRECEDE THIS NOTE ARE NOT AVAILABLE FOR ORDERING.
PART NUMBERS THAT OR DOT HAVE A LINE PRECEDE (MODE/S) THAT PHYSICAL PARTS ARE AVAILABLE FOR ORDERING.
CONTACT ORDERING SALES TO ASSURE AVAILABILITY OF PARTS.

DWG TYPE: PART DRAWING
STYLE:
VOLUME (IN³): 2.860
DENSITY (LBS/IN³):
UNLESS OTHERWISE SPECIFIED
THIS DRAWING IS IN ACCORDANCE WITH ASME Y14.5M-1994 UNLESS OTHERWISE SPECIFIED. DIMENSIONS ARE TO BE CALCULATED ACCORDING TO ASME Y14.5M-1994 GEOMETRIC TOLERANCES AND RELATED DATUMS APPLY ONLY TO THE FEATURE FORMED AT THIS LEVEL OF MANUFACTURE. THE DIMENSIONS AND TOLERANCES IN THIS DRAWING DO NOT INCLUDE ANY ADDITIONAL PROCESS EFFECTS (SUCH AS PLATING, PAINTING, ETC.) UNLESS OTHERWISE SPECIFIED. REFERENCE DIMENSIONS ARE IN BRACKETS.
ALL DIMENSIONS ARE IN MILLIMETERS

PROCESS INSPECTION STANDARDS
DIMENSIONS ARE BASED ON A 3 INSPECTS SAMPLE SIZE AND ARE TO BE TO ANSI/ASQC Z1.4 LIMITS AND DEVIATIONS.

REFERENCE

STANDARD DEVIATIONS								
FROM	0	20	30	50	70	100	150	200	250	300	400
TO	20	30	50	70	100	150	200	250	300	400	
TOLERANCE DEVIATIONS (MINUTES)											
±0.25	±0.4	±0.6	±0.8	±1.0	±1.2	±1.4	±1.6	±1.8	±2.0	±2.2	±2.4

SCALE: NONE
DIMENSIONS ARE IN MILLIMETERS

THIRD ANGLE PROJECTION
DO NOT SCALE
USE MATH DATA

NX

DELPHI

DELPHI PACKARD ELECTRICAL/ELECTRONIC ARCHITECTURE
WARREN, OH

COPYRIGHT 2002 DELPHI AUTOMOTIVE SYSTEMS LLC
ALL RIGHTS RESERVED.
THIS DRAWING IS THE PROPRIETARY PROPERTY OF DELPHI AUTOMOTIVE SYSTEMS LLC. IT CONTAINS CONFIDENTIAL INFORMATION AND TRADE SECRETS OF DELPHI. DISCLOSURE TO OTHERS OR ANY OTHER USE WITHOUT WRITTEN CONSENT OF DELPHI IS PROHIBITED.

		DATE
DR	APVD1 F. GETTEL	12JL02
	APVD2 F. GETTEL	12JL02
	APVD3 F. ROMERO	15JL02
	APVD4	
	APVD5	

SUBSTANCES OF CONCERN AND RECYCLED CONTENT PER DELPHI (REVISED)

MATERIAL: ACETAL - PP IN BLK

DRAWING NAME: MOUN CLIP CDT 19MM ROSEBUD

DRAWING NUMBER: 12004614

SIZE	SCALE	TRANS MT	SHEET NO	TTL	REV	NXP
AD	4:1	1 OF 1	1 OF 1	R	02	AB