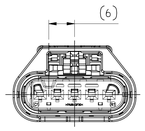

KEY A
SCALE 2:1

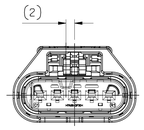

KEY B
SCALE 2:1

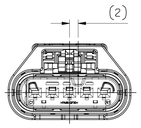

KEY C
SCALE 2:1

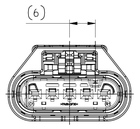

KEY D
SCALE 2:1

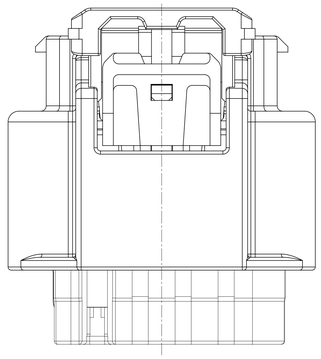

ISOMETRIC VIEW		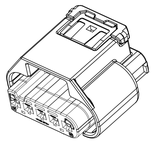	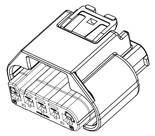
OPTION		WITH CPA	WITHOUT CPA
DELPHI	PART NUMBER	33241268 35335583	33241269
	PART REVISION	01	01

SYMBOL DEFINITION		
A DIMENSION WITHOUT AN INSPECTION REPORT SYMBOL ( ) DOES NOT REQUIRE INSPECTION. IT MAY BE CONTROLLED ON THE INDIVIDUAL COMPONENT DRAWING.	TOTAL NO OF INSPECTIONS REQUIRED	4
	LAST NO. USED	4

MISSING SYMBOLS
NO MISSING SYMBOL NUMBER

DWG STATUS					ZONE	REVISION HISTORY	AUTH	DR	APVD1	APVD2
DATE	STG	REV	N/P	CHG						
06OC16	R	01	-	-		INITIAL RELEASE		SYK	JJY	PJH
11NO16	R	02	-	-		CHANGED PART NUMBER ADDED DUMMY SEAL (DARK GRAY)		SYK	JJY	PJH
22DE17	R	03	-	-		ADDED NOTES 5 MODIFIED TABLE OF CABLE SEAL		SYK	SJW	PJH
08AP19	R	04	-	-		ADDED PART NO. WITH NEW CPA (LT GRAY)	446177	SYK	SJW	PJH

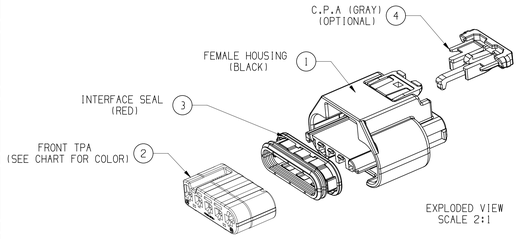

EXPLODED VIEW
SCALE 2:1

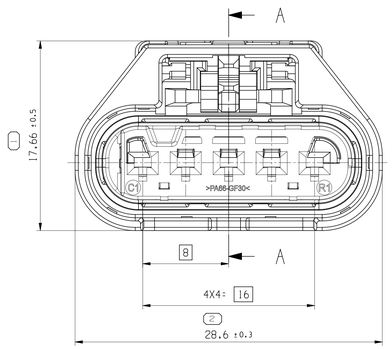

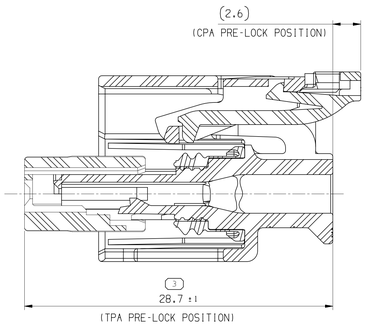

SECTION A-A

C.P.A & T.P.A IN PRE LOCK POSITION

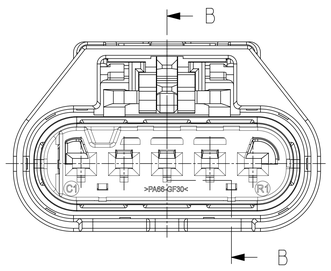

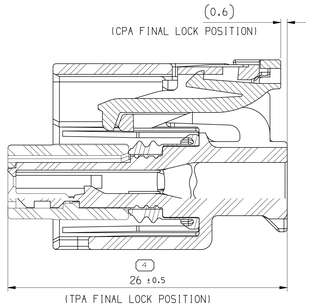

SECTION B-B

C.P.A & T.P.A IN FINAL LOCK POSITION

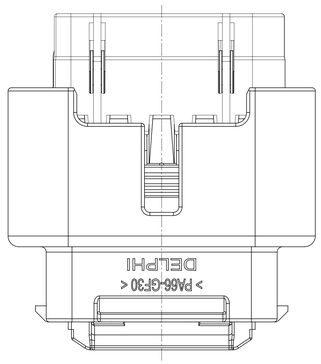

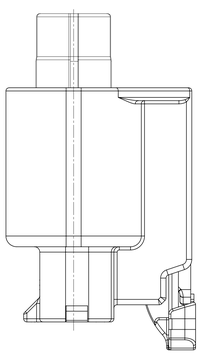

4	1	CPA	PA66 GF35%	GRAY	33219398	OPTIONAL
3	1	INTERFACE SEAL	SILICONE RUBBER	RED	33272062	
2	1	TPA CODE A	PA66 GF30%	ROYAL BLUE	33272057	
1	1	FEMALE HOUSING	PA66 GF30%	BLACK	33272048	
REP	QTY	DESCRIPTION	MATERIAL	COLOR	DELPHI P/N	REMARK

CABLE SEAL						
TYPE	PART NUMBER	MVL PART NUMBER	WIRE SIZE (mm^2)	INSULATION(Ø)	COLOR	MATERIAL
LONG	33513680	F310400	0.3 ~ 0.35	1.2 ~ 1.5	RED	SILICONE RUBBER
	33511838	F410400	0.5 ~ 0.85	1.6 ~ 1.9	GRAY	
	33513681	F599700	1.0 ~ 1.5	2.0 ~ 2.4	YELLOW	
SHORT	33318278	-	0.3 ~ 0.35	1.2 ~ 1.6	GRAY	
	33318279	-	0.5 ~ 0.85	1.6 ~ 1.9	LIGHT GRAY	
	33318275	-	1.0 ~ 1.5	1.9 ~ 2.4	BLACK	
DUMMY SEAL	33402443	-	-	-	WHITE	
	35020635	-	-	-	DARK GRAY	
LONG	33268526	-	0.3 ~ 0.35	1.2 ~ 1.5	BLUE	FLUORO SILICONE
SHORT	33366680	-	0.3 ~ 0.35	1.2 ~ 1.6	BLUE	
	33366681	-	0.5 ~ 0.85	1.6 ~ 1.9	GREEN	
	33366679	-	1.0 ~ 1.5	1.9 ~ 2.4	BROWN	

NOTES:

1. TOLERANCE MUST MEET DIN ISO 2768(M)
2. TEST SPECIFICATION PER : HKMC ES91500-00
3. ALLOWED WIRE RANGE : 0.3mm² TO 1.25mm² (JASO WIRE)
4. APPLICABLE TERMINAL : APEX1.2 FEMALE TERMINAL
5. APPLICABLE MATERIAL OF SEAL IS ONLY SILICONE RUBBER FOR HKMC

TYPE	ASSEMBLY	CODING TYPE	HOUSING	TPA P/NO	TPA COLOR	INTERFACE SEAL	CPA (OPTIONAL)
WITH CPA	33241268	A	33272048	33272057	ROYAL BLUE	33272062	33219398 (GRAY)
	33271696	B		33272058	BROWN		
	33271697	C		33272059	LT GRAY		
	33271699	D		33272060	RED		
	35335583	A		33272057	ROYAL BLUE		35335604 (LT GRAY)
	35335584	B		33272058	BROWN		
	35335585	C		33272059	LT GRAY		
	35335586	D		33272060	RED		
WITHOUT-CPA	33241269	A		33272057	ROYAL BLUE		-
	33271700	B		33272058	BROWN		
	33271702	C		33272059	LT GRAY		
	33271703	D		33272060	RED		

ASSOCIATED PARTS				
FEMALE TERMINAL		PART NUMBER	WIRE SIZE(OD, mm^2)	TYP (AWG)
APEX 1.2	TIN	54001864	0.75 ~ 1.25	16
				18
		54002006	0.3 ~ 0.5	20
				22
	SILVER STRIPE, SPOT	F731400	0.75 ~ 1.25	16
				18
		F931400	0.3 ~ 0.5	20
				22
	GOLD STRIPE, SPOT	54001863	0.75 ~ 1.25	16
				18
		54002005	0.3 ~ 0.5	20
				22
	TIN SILVER	54001866	0.75 ~ 1.25	16
				18
		54002007	0.3 ~ 0.5	20
				22

DIN ISO 2768	Tolerance Class medium (m)					
Linear Dimensions except for broken edges	Permissible deviations for basic size range (mm)					
	0.5 *) up to 3	over 3 up to 6	over 6 up to 30	over 30 up to 120	over 120 up to 400	over 400 up to 1000	over 1000 up to 2000
	±0.1	±0.1	±0.2	±0.3	±0.5	±0.8	±1.2
Broken edges (radii, chamfers)	Permissible deviations for basic size range (mm)					
	0.5 *) up to 3	over 3 up to 6	over 6			
	±0.2	±0.5	±1			
Angular dimensions	Permissible deviations for ranges of lengths, in mm, of the shorter side of the angle concerned					
	up to 10	over 10 up to 50	over 50 up to 120	over 120 up to 400	over 400	
	±1°	±0° 30'	±0° 20'	±0° 10'	±0° 5'	

*) For nominal sizes below 0.5mm, the deviations shall be indicated adjacent to the relevant nominal size(s).

DIMENSIONAL RANGE (MM)											CHART EL
FROM	> 0	>3	>6	> 30	> 70	>100	>150	>200	>250	>300	
TO	3	6	30	70	100	150	200	250	300	400	
TOLERANCE UNLESS OTHERWISE SPECIFIED											
	±0.15	±0.2	±0.3	±0.4	±0.5	±0.6	±0.8	±1	±1.2	±1.6	
ANGULAR TOLERANCE ±2°											

PROCESS SENSITIVE DIMENSION

DIMENSIONS ENCLOSED IN ( ) INDICATE REFERENCE DIMENSIONS AND NO TOLERANCE LIMITS ARE ESTABLISHED

A ——— LINE DRAWN THROUGH A PART NUMBER INDICATES THAT PHYSICAL PARTS ARE NOT AVAILABLE FOR ORDERING.

PART NUMBERS THAT DO NOT HAVE A LINE PRESENT INDICATE THAT PHYSICAL PARTS ARE AVAILABLE FOR ORDERING.

CONTACT APTIV SALES TO ASSURE AVAILABILITY OF PARTS.

DWG TYPE: PART DRAWING

STYLE

VOLUME (CM³): -

DISTR CODE

UNLESS OTHERWISE SPECIFIED

THIS DOCUMENT IS IN ACCORDANCE WITH ASME Y14.5M-1994 AS AMENDED BY THE GM GLOBAL DIMENSIONING AND TOLERANCING ADDENDUM 2001. SEPARATE PATTERNS OF FEATURES MAY BE GAGED SEPARATELY REGARDLESS OF DATUM REFERENCES.

ALL DIMENSIONS ARE IN MILLIMETERS

REFERENCE

THIRD ANGLE PROJECTION

DO NOT SCALE

USE MATH DATA

NX

•APTIV•

CONNECTION SYSTEMS
Namyang, Korea

COPYRIGHT APTIV. ALL RIGHTS RESERVED.

THIS DRAWING IS THE PROPERTY OF APTIV AND CONTAINS APTIV CONFIDENTIAL INFORMATION. THE REPRODUCTION, DISTRIBUTION AND UTILIZATION OF THIS DOCUMENT OR ITS RELATED CAD MATH DATA, AS WELL AS COMMUNICATION OF ANY CONTENT TO OTHERS, WITHOUT EXPRESS AUTHORIZATION, IS PROHIBITED.

		DATE
DR		
APVD1	SUNG,YUN-KYU	06OC16
APVD2	JUNG,JAE-YUP	06OC16
APVD3	PARK,JOO-HYUN	06OC16
APVD4		
APVD5		

SUBSTANCES OF CONCERN AND RECYCLED CONTENT PER DELPHI [094900]

MATERIAL: SEE TABLE

DRAWING NAME: APEX1.2 5WAY FEMALE CONNECTOR ASSY

DRAWING NUMBER: 33390988

SIZE	SCALE	FRAME NO	SHEET NO	STG	REV	N/P
A0	5:1	1 OF 1	1 OF 1	R	04	-

User: n.ocak
Date: 2020/05/21/04
Page: 3.7.0.0.0