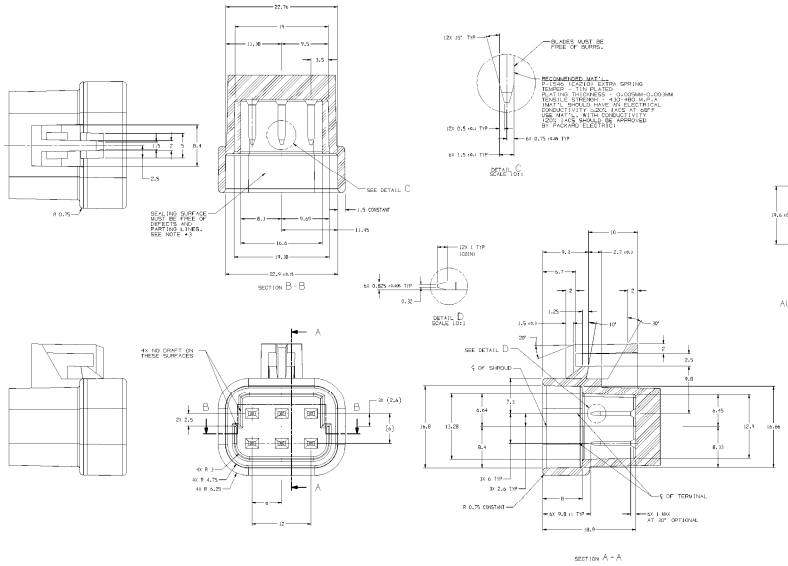

MATING CONNECTOR INFORMATION

RECOMMENDED MAT'L - GLASS REINFORCED NYLON OR POLYESTER.

NOTES

1. WHEN USING THIS INFORMATION FOR A NEW DESIGN, REQUEST THE LATEST COPY OF THIS PRINT FROM PACKARD ELECTRIC DIVISION.
2. ALL RADII 0.4, UNLESS OTHERWISE SPECIFIED.
3. THIS SURFACE IS "CRITICAL" FOR PART FUNCTION. ALSO, ALL THREE PLACE DIMENSIONS ARE "CRITICAL".
4. THE SHAPE OF THE SHROUD AND LOCK ARE REPRESENTATIVE. ALTERNATE SHROUD AND LOCK DESIGNS, SEALING SURFACES AND/OR GROUND METHODS ARE PERMITTED AS LONG AS FUNCTION IS MAINTAINED.

SYMBOL DEFINITION		MISSING SYMBOLS
A-DIMENSION WITHOUT AN INSPECTION REPORT SYMBOL (*) DOES NOT REQUIRE INSPECTION. IT MAY BE CONTROLLED ON THE INDIVIDUAL COMPONENT DRAWINGS.	TOTAL NO OF INSPECT DIMS REQUIRED: 16	NO MISSING SYMBOL NUMBER
	LAST NO. USED: 12	

| DR CHECK | | |