INTERFACE FOR METAL BRACKET

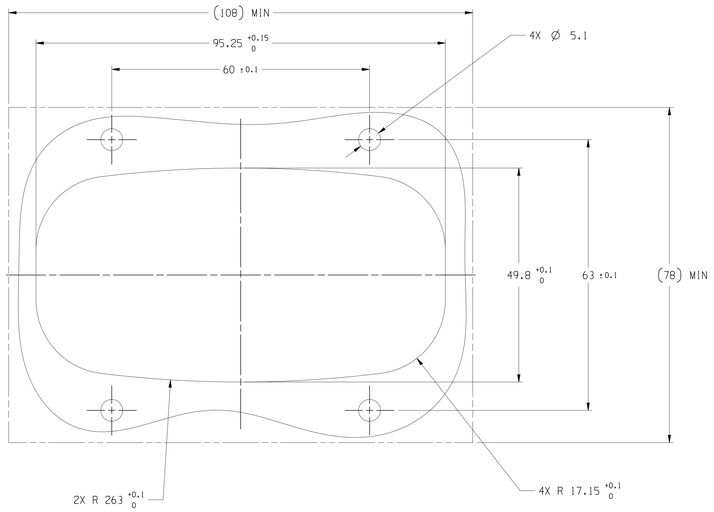

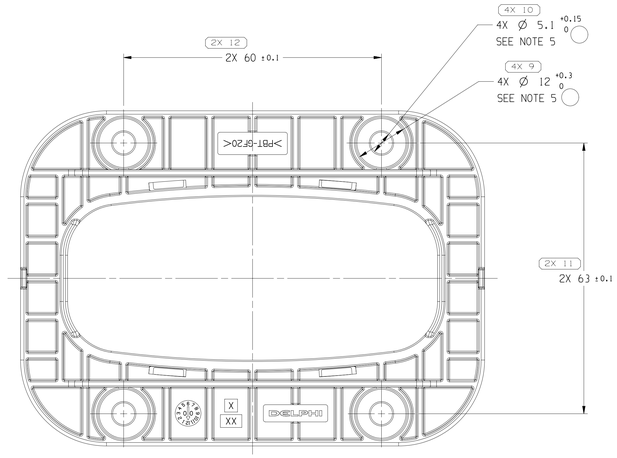

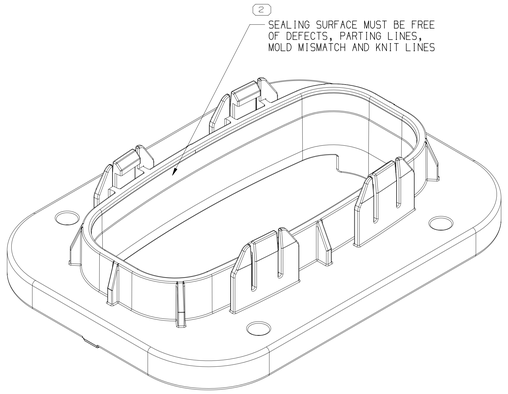

REQUIRED ROUGHNESS FOR SEALING SURFACE
Ra <1.6 ; Rz <3.2; Rmax < 6.3; Tp > 50%

MATERIAL THICKNESS
2.0 - 4.0

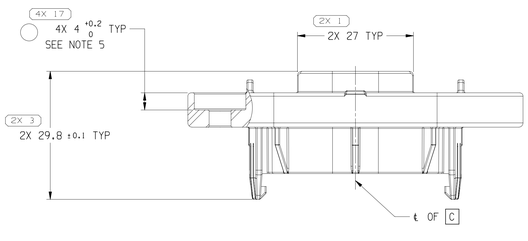

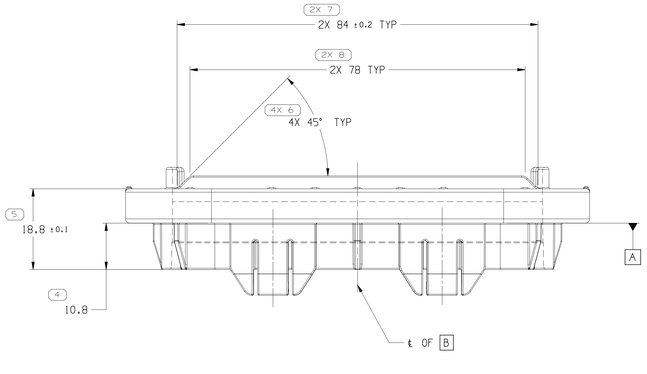

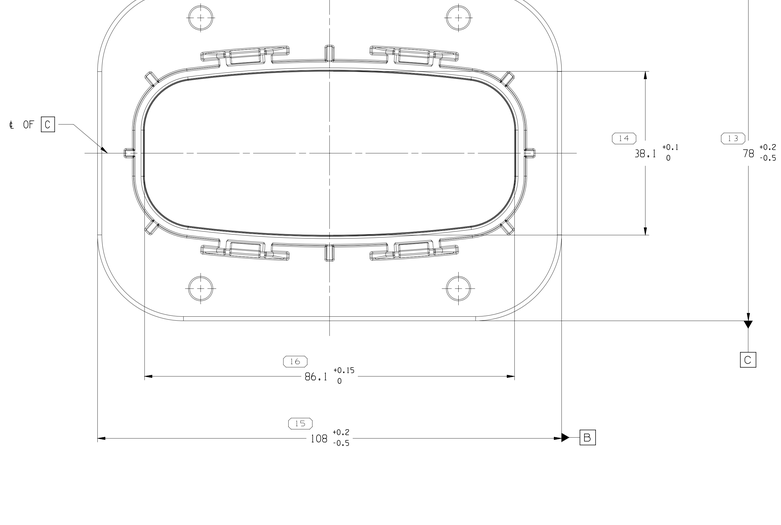

NOTES

1. UNLESS OTHERWISE SPECIFIED AND/OR INDICATED:

   DIMENSIONS ARE TO FACE OF VIEW SHOWN AND AUTOMATICALLY ROUNDED BY COMPUTER FOR INSPECTION (SEE MATH MODEL FOR PRECISE DIMENSIONS). FOR ALL OTHER DIMENSIONS NOT SHOWN BUT REQUIRED FOR TOOL BUILD, SEE MATH MODEL FOR PRECISE TOOL PATH DATA.

2. PARTS SHOWN ON THIS DRAWING USED IN ASSEMBLIES SHOWN ON TAXI 33198864.

3. THIS PRODUCT IS NOT CATEGORIZED AS AN APPEARANCE ITEM, MINOR IMPERFECTIONS INCLUDING, BUT NOT LIMITED TO, FLOW MARKS, COLOR BLEMISHES, GATE VESTIGE, AND SOFT FLASH THAT DO NOT AFFECT THE FIT, FORM, OR FUNCTION OF THE PART ARE PERMISSIBLE PER DPNP-4.7-CS-01.

4. (1.3)X(0.1) DELPHI CORPORATE BRAND TO BE LOCATED ON ANY EXTERIOR SURFACE, PREFERABLY VISIBLE AT FINAL ASSEMBLY. OPTIONAL CONSTRUCTION FOR EXISTING TOOLING MAY BE "PED".

5. MAXIMUM SPACE FOR RIVETS (ISO 14589)(M5) OR BOLTS AND METAL SAFETY NUT. TIGHTENING TORQUE 3+/-0.5Nm.

SYMBOL DEFINITION		
A DIMENSION WITHOUT AN INSPECTION REPORT SYMBOL ( ) DOES NOT REQUIRE INSPECTION. IT MAY BE CONTROLLED ON THE INDIVIDUAL COMPONENT DRAWING.	TOTAL NO OF INSPECTIONS REQUIRED	35
	LAST NO. USED	17

MISSING SYMBOLS
NO MISSING SYMBOL NUMBER

DWG STATUS					ZONE	REVISION HISTORY	AUTH	DR	APVD1	APVD2
DATE	STG	REV	N/P	CHG						
15AP15	R	01	-	-		RELEASED PART DRAWING	427871	KV	KV	TKS
04FE16	R	01	AA	-		REMOVED BASIC DIM 2X 39.39 TYP	432010	KV	KV	TKS
26AP16	R	02	-	-		DIM #9 WAS 4X Ø12 +0.25 /-0	432874	KV	KV	TKS
06SE17	R	02	AA	-		ADDED MOUNTING METAL BRACKET VIEW AND PSD WAS #8	437278	JVM	JVM	TKS
12NO18	R	02	AB	-		UPDATED PART AVAILABILITY	441554	KRK	KRK	KST
23JA19	R	02	AC	-		ADDED NOTE #5 & CALLOUT TO DIMS #9 & #10 AND DIM #17	442086	SM	RRR	KST

A LINE DRAWN THROUGH A PART NUMBER INDICATES THAT PHYSICAL PARTS ARE NOT AVAILABLE FOR ORDERING.

PART NUMBERS THAT DO NOT HAVE A LINE PRESENT INDICATE THAT PHYSICAL PARTS ARE AVAILABLE FOR ORDERING.

CONTACT APTIV SALES TO ASSURE AVAILABILITY OF PARTS.

DWG TYPE: PART DRAWING

STYLE

VOLUME (CM³): 30.801

DISTR CODE: D

UNLESS OTHERWISE SPECIFIED

THIS DOCUMENT IS IN ACCORDANCE WITH ASME Y14.5M-1994 AS AMENDED BY THE IM GLOBAL DIMENSIONING AND TOLERANCING ADDENDUM-2001. SEPARATE PATTERNS OF FEATURES MAY BE DAGED SEPARATELY REGARDLESS OF DATUM REFERENCES.

ALL DIMENSIONS ARE IN MILLIMETERS

REFERENCE

(10) PROCESS SENSITIVE DIMENSION

DIMENSIONS ENCLOSED IN ( ) INDICATE REFERENCE DIMENSIONS AND NO TOLERANCE LIMITS ARE ESTABLISHED

DIMENSIONAL RANGE (MM)									CHART E1
FROM TO	> 0 20	> 20 30	> 30 70	> 70 100	>100 150	>150 200	>200 250	>250 300	>300 400
TOLERANCE UNLESS OTHERWISE SPECIFIED									
	±0.15	±0.2	±0.3	±0.4	±0.5	±0.6	±0.8	±1	±1.2
ANGULAR TOLERANCE ±2°									

THIRD ANGLE PROJECTION

DO NOT SCALE
USE MATH DATA

NX

•APTIV•
CONNECTION SYSTEMS
Chennai, India

COPYRIGHT 2015 APTIV. ALL RIGHTS RESERVED.

THIS DRAWING IS THE PROPERTY OF APTIV AND CONTAINS APTIV CONFIDENTIAL INFORMATION. THE REPRODUCTION, DISTRIBUTION AND UTILIZATION OF THIS DOCUMENT OR ITS RELATED CAD MATH DATA, AS WELL AS COMMUNICATION OF ANY CONTENT TO OTHERS, WITHOUT EXPRESS AUTHORIZATION, IS PROHIBITED.

		DATE
DR		
APVD1	V.KANDASAMY	13AP15
APVD2	V.KANDASAMY	13AP15
APVD3	TURNER KEVIN S	15AP15
APVD4		
APVD5		

SUBSTANCES OF CONCERN AND RECYCLED CONTENT PER APTIV 10949001

MATERIAL: POLYESTER COMPOUND BLACK

DRAWING NAME: MOUN ADAPTER

DRAWING NUMBER: 33204327

SIZE	SCALE	FRAME NO	SHEET NO	STG	REV	N/P
A0	2:1	1 OF 1	1 OF 1	R	02	AC

User: bz7n_B
Dept: 1.1300201 - CIS01-CS/CAD
Dept: 09-Jul-19 Time: 08:41:40