SYMBOL DEFINITION		
A DIMENSION WITHOUT AN INSPECTION REPORT SYMBOL DOES NOT REQUIRE INSPECTION. IT MAY BE CONTROLLED ON THE INDIVIDUAL COMPONENT DRAWING.	TOTAL NO OF INSPECTIONS REQUIRED	114
	LAST NO. USED	39

MISSING SYMBOLS
NO MISSING SYMBOL NUMBER

DWG STATUS DATE	SIZE	REV	A/P	CHG	ZONE	REVISION HISTORY	AUTH	DR	APVD	APVD 2
25AU15	R	01	-	-	-	RELEASED PART DRAWING	430580	HCD	HCD	AH
08DE15	R	01	AA	-	-	UPDATED PART AVAILABILITY	431651	MIB	MIB	JGR
17JL19	R	01	AB	-	-	ADDED 35327873 O-RING NOTE	443961	GLO	GLO	JGR

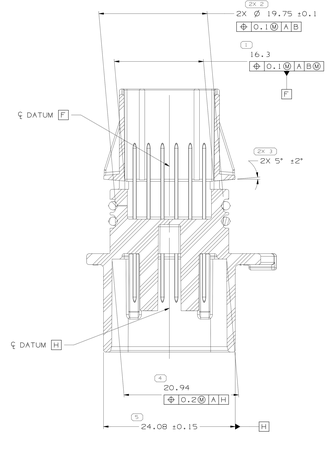

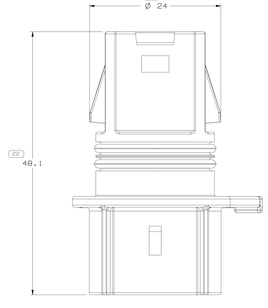

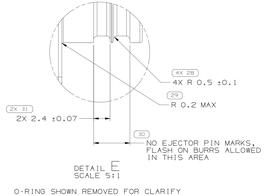

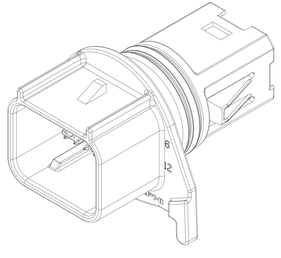

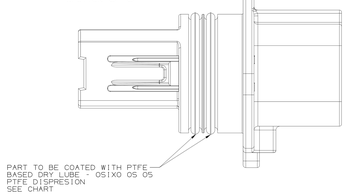

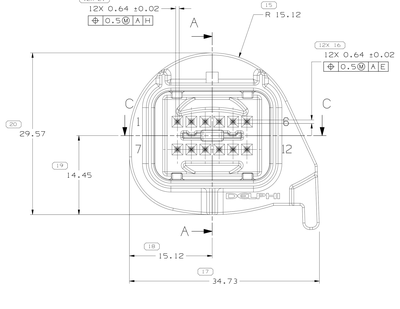

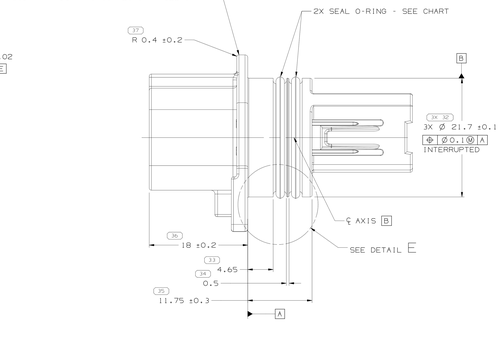

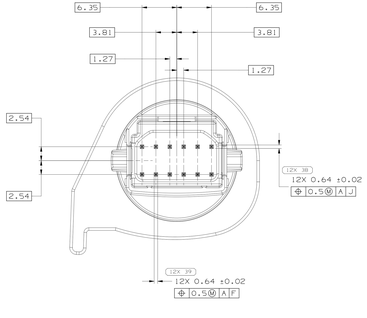

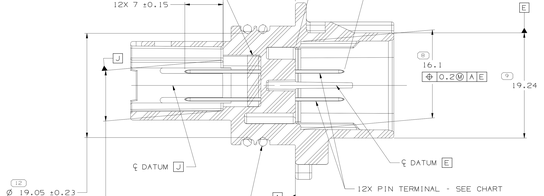

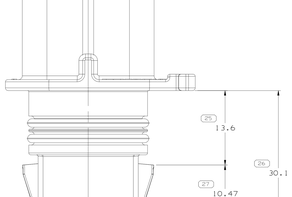

NOTES

1. UNLESS OTHERWISE SPECIFIED AND/OR INDICATED:

   DIMENSIONS ARE TO FACE OF VIEW SHOWN AND AUTOMATICALLY ROUNDED BY COMPUTER FOR INSPECTION (SEE MATH MODEL FOR PRECISE DIMENSIONS). FOR ALL OTHER DIMENSIONS NOT SHOWN BUT REQUIRED FOR TOOL BUILD, SEE MATH MODEL FOR PRECISE TOOL PATH DATA.

2. THIS PRODUCT IS NOT CATEGORIZED AS AN APPEARANCE ITEM. MINOR IMPERFECTIONS INCLUDING, BUT NOT LIMITED TO, FLOW MARKS, COLOR BLEMISHES, GATE VESTIGE, AND SOFT FLASH THAT DO NOT AFFECT THE FIT, FORM, OR FUNCTION OF THE PART ARE PERMISSIBLE PER EANP_4-3_CS_01_EN.

3. REFERENCE MATING COMPONENTS OR EQUIVALENT:

   CONNECTOR 13877790 & 15504257

4. CORPORATE BRAND TO BE APPLIED TO PRODUCT DESIGN PER THE LATEST REVISION OF ESD 51085201

5. MAX LEAK RATE IS 0.4 SCC/MIN AT A PRESSURE OF 4.6-5.6 PSI AT 16-35 °C. (1 SCC=1 CC AT ONE ATMOSPHERE). LEAK TEST PROCEDURES TO BE APPROVED BY DELPHI.

6. 35327873 O-RING IS ALSO ACCEPTABLE TO USE IN THIS ASSEMBLY.

33217219	33217218	1398990 3	1384210 5	M6029001	M6504001
PART NO	BODY - PASS THRU CONNECTOR	SEAL - O-RING	PIN - TERMINAL	EPOXY SEALANT	LUBE

DRAWING NUMBER							
33217219							
SIZE	SCALE	CHANGE NO	SHEET NO	SHEET NO TOT	REV	REV	A/P
A1x3	4:1	2 OF 2	1 OF 1	R	01	AB	

DIMENSIONAL RANGE (MM)								
FROM	0	6	30	120	315	1000	2000	4000
TO	6	30	120	315	1000	2000	4000	8000
TOLERANCE (UNLESS OTHERWISE SPECIFIED)								
±0.15	±0.2	±0.3	±0.5	±0.8	±1.2	±2	±3	±4
ANGULAR TOLERANCE ±0°								

(N/A) PROCESS SENSITIVE DIMENSION

DIMENSIONS ENCLOSED IN ( ) ARE REFERENCE DIMENSIONS AND NO TOLERANCE IS TO BE ESTIMATED.

REFERENCE

THIRD ANGLE PROJECTION

DO NOT SCALE

USE MATH DATA

NX

A ~~~~ LINE DRAWN THROUGH A PART NUMBER INDICATES THAT PHYSICAL PARTS ARE NOT AVAILABLE FOR ORDERING.

PART NUMBERS THAT DO NOT HAVE A LINE PRESENT INDICATE PHYSICAL PARTS ARE AVAILABLE FOR ORDERING.

CONTACT APTIV SALES TO ASSURE AVAILABILITY OF PARTS.

COPYRIGHT 2015 APTIV, ALL RIGHTS RESERVED.

THIS DRAWING IS THE PROPERTY OF APTIV AND CONTAINS APTIV CONFIDENTIAL INFORMATION. THE RECEIPT OF THIS DRAWING OR THE UTILIZATION OF THIS DOCUMENT OR ITS RELATED CAD MATH DATA, MUST BE COMMUNICATION OF ANY CONTENTS TO OTHERS, WITHOUT EXPRESS AUTHORIZATION, IS PROHIBITED.

TITLE	PART DRAWING
VOLUME (CM³)	SYSTEM CODE

UNLESS OTHERWISE SPECIFIED

THIS DOCUMENT IS IN ACCORDANCE WITH ASME Y14.5M-1994 UNLESS OTHERWISE SPECIFIED. DIMENSIONS AND TOLERANCING ASSUMED COLD. SEPARATE PATTERNS OF FEATURES MAY BE GROUP SEPARATELY REGARDLESS OF DATUM REFERENCE.

ALL DIMENSIONS ARE IN MILLIMETERS

		DATE
DR		
APVD1	HECTOR CLAUDIO	28AU15
APVD2	HECTOR CLAUDIO	28AU15
APVD3	AGUSTIN HERNANDEZ	28AU15
APVD4		
APVD5		
MATERIAL	SUBSTANCES OF CONCERN AND RECYCLED CONTENT PER APTIV (DRAFTS)	
FINISH	SEE CHART	

DRAWING NAME

ASM CONN 12 M MICRO 64 SLD HEADER

DRAWING NUMBER							
33217219							
SIZE	SCALE	CHANGE NO	SHEET NO	SHEET NO TOT	REV	REV	A/P
A1x3	4:1	2 OF 2	1 OF 1	R	01	AB	

•APTIV•

CONNECTION SYSTEMS

WARREN, OH

3 3 S I S I A

PRINT VERSION NOT TO SCALE
Form C027-10 Rev A on 2-Nov-2010
Template: T0000002 Rev AD on 15-Jun-2015
Unless otherwise specified: ~~~~ Dim: 1.1111.222