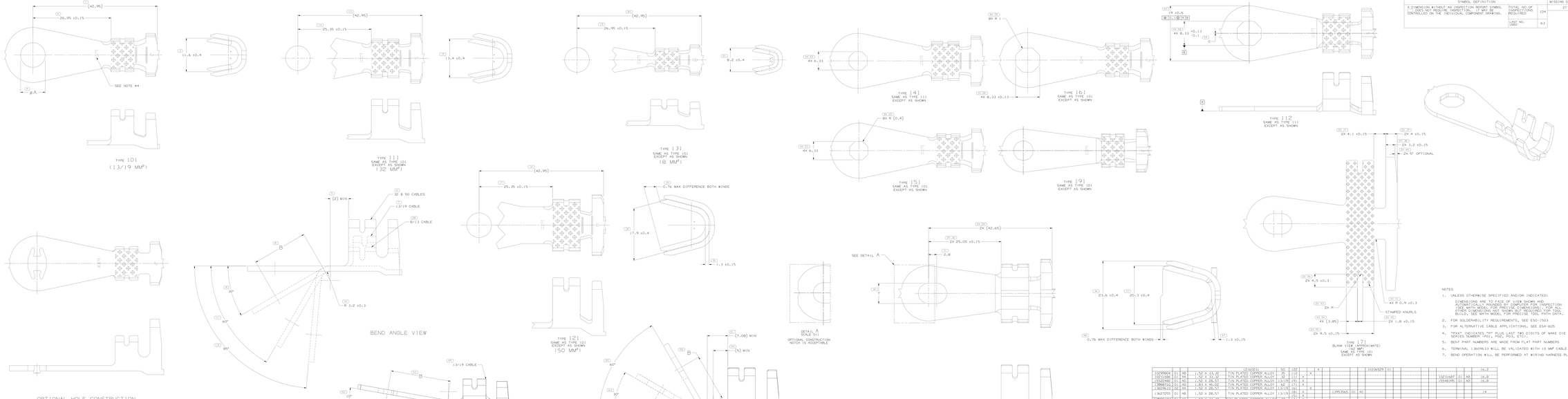

SYMBOL DEFINITION
A DIMENSION WITHOUT AN INSPECTION REPORT SYMBOL CODE, DOES NOT REQUIRE INSPECTION. IT MAY BE CONTROLLED ON THE INDIVIDUAL COMPONENT DRAWING.

TOTAL NO. OF INSPECTIONS REQUIRED	104
LAST NO. USED	63

MISSING SYMBOLS
27

ZONE	REV	DATE	DR	REVISION HISTORY	ECN	DR	CHK
DEMO	B	15		RELEASED (SCHMITZ, WISTRELER AND MADDUXINA ADD, WISTRELER MAS PMD1198 ADD, WISTRELER MAS PMD1198 -TBL, WISTRELER MAS PMD1198 -TBL, WISTRELER MAS PMD1198 -TBL)	2T2810	JJF	JF
DL-REV	B	08		(3M4175) - RELEASED	2E1176	DJE	AN
STRUCT	B	09		(3M4192 & 1D4191C) - RELEASED	2D8904	TLD	SF
ISDD	B	10		(3M4192) - ADDED MAS WIRING A SIZE WAS .152 X .06/07	2D5017	JLS	JCM
DL-REV	B	11		(1D4191C) - UPDATED PART ATTRIBUTES AND ADDED MAS WIRING	2K2135	BRB	BRB
DMR04	B	12		(3M4241) - RELEASED	2L2896	JTZ	AMLM
DMR08	B	13		(3M4239 - RELEASED	2D4412	DAN	DAN
DMR05	B	14		(3D9984 - RELEASED	2B2963	BPD	MS
DMR07	B	15		(3M3705 - RELEASED	4D4495	JJC	AMLM
DMR07	B	16		(3L8025 - RELEASED	4D6513	DTD	MS
DL-REV	B	17		(3M4173) - RELEASED	4D4425	DDA	DDA
DMR07	B	18		(3M4171 & 3M4174) - RELEASED	4D2143	BTL	MS
DMR07	B	19		ALL ACTIVE PARTS - REMOVED SIZE COLUMN FROM CHART	4D2387	BLB	PMDM
DMR08	B	20		(3M4171) - OBSOLETE	4D2740	PPDL	DPM
DMR08	B	21		(3L8963) - UPDATED PDM ATTRIBUTES	4D6888	PBD	KDDM
PJT2010	B	22		(3L8963) - CABLE SIZE WAS 8/11	4D7222	PBD	KDDM
LDMR08	B	23		(1T5367) - RELEASED	4D7412	MPE	AMLM
DMR08	B	24		ALL ACTIVE PARTS - UPDATED TBT CHART (3L8963) - RELEASED MODEL AND ID NUMBER	4D7412	BLT	AMLM
LDMR11	B	25		(3M8812) - RELEASED	4L2526	DJ	DJ
LDMR11	B	26		(3M8812) - WIDE PART MATCH PROMT	4L3842	DJ	DJ
DL-REV	B	27		(3M4171) - OBSOLETE	4M5128	DMJ	MS
LDR11	B	28		(3M8812) - UPDATED MATL VALUES	4T5.6M	JR	JR
DMR11	B	29		(3M8812) - UPDATED PDM ATTRIBUTES, ALL TYPE 101 - ADDED DIM A1 & 1.4R	4X4.7M	DMR	KS
DMR11	B	30		(3M8812) - DIM A2 WAS 26.35, DIM A3 WAS 25.15, DIM A4 WAS 25.15 & DIM A5 WAS 45.8MM	4X6.5T	DMR	KS
DMR11	B	31		(3M8812) - UPDATED PDM ATTRIBUTES, ALL TYPE 101 - ADDED DIM A1 & 1.4R, ALL TYPE 111 & 8MM2 - ADDED DIM A1 & 1.4R, ALL TYPE 121 & 50MM2 - ADDED DIM A1 & 1.4R	4X4M	DMR	KS
LD-REV	B	32		(3M4174) & (3M4175) - OBSOLETE	4X6M	DMR	AMLM
LD-REV	B	33		(3M4171) - REINSTATED	4X5M	DMR	AMLM
LMR12	B	34		(1P5.9M5) - RELEASED	4Y5.8	PTB	AMLM
LMR12	B	35		(1P5.9M5) - (-1/-2 WAS .9) (-3 WAS .7) X +/- .1/.5 WAS 0.4/.5/0.5	4X8.8	PTB	PTB
ZJCC	B	36		(3D4192) & (1D4191M) - WIRE ON DRAWING ADDED	4Z4.7M	BRB	MS
DMR14	B	37		ALL AVAILABLE PARTS - (F.E MAS A) UPDATED MOUNTING HOLE CHART & FLOWER CALLOUT (3L8963) - (F.E MAS A) UPDATED MOUNTING SHEETS NUMBER (-3F (F.E MAS -3F)	4X5.5M	DMR	AMLM
DMR14	B	38		(3D2940 & 1D4401M) - CORRECTED SCREW STAD SIZE 'MA' WAS M6	4X5.4M	DJ	AMLM
DL-LM	B	39		(3D4401M) - UPDATED PART AVAILIBILITY	4Z5M	DMR	AMLM
DJCC	B	40		(3D7600) - RELEASED	4Z7M	DMR	DMR
ZDACC	B	41		(3D9984) - UPDATED PART AVAILIBILITY	4Z6.1T	DMR	DMR
LMR15	B	42		(3D3408) AND (3D3348) - RELEASED	4Z9.1T	DJD	DJD
LJACC	B	43		(3D3408 & 1D3348) - UPDATED PART AVAILIBILITY	4Z9M	DJD	MS
DDCTC	B	44		(3M8713) (3M4169 & 3) - OBSOLETE	4J3.1	DMR	AMLM
DDCTC	B	45		(1D7984) - RELEASED AND ADDED DWG 1D7984	4J2M	DJC	AMLM
FMR15	B	46		(1D3420) (B - RELEASED) (1D3420M, B1, (1D3420M-B2, (1D3420M-B3, (1D3420M-B4, (1D3420M-B5, (1D4421, (1D4421, (1D4421, (1D7600, (1D7600, (1D7600, (1D7600, (1D7600