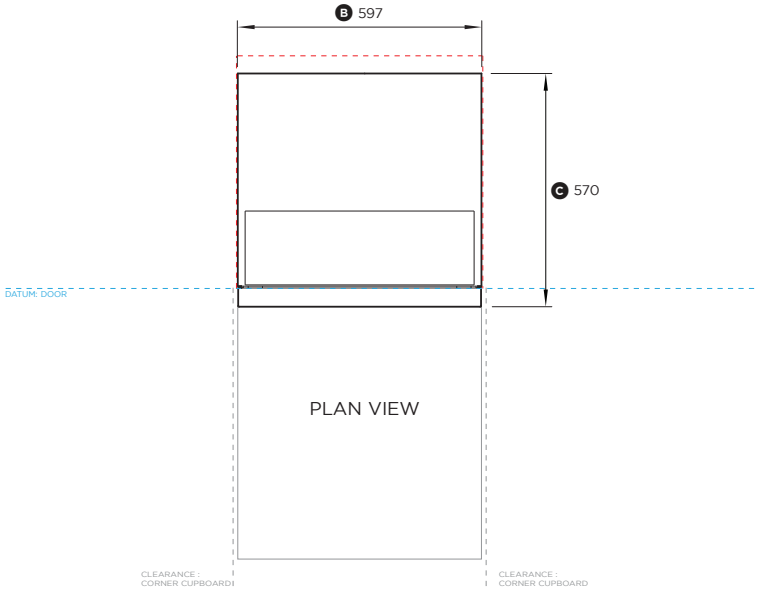

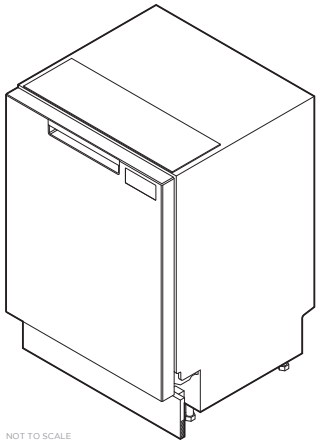

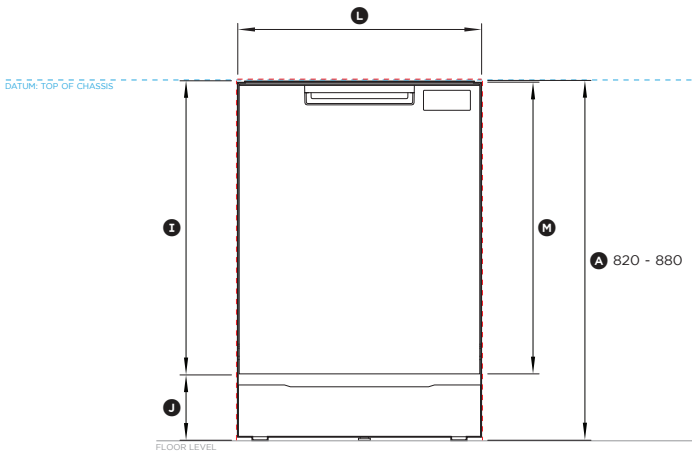

FRONT VIEW

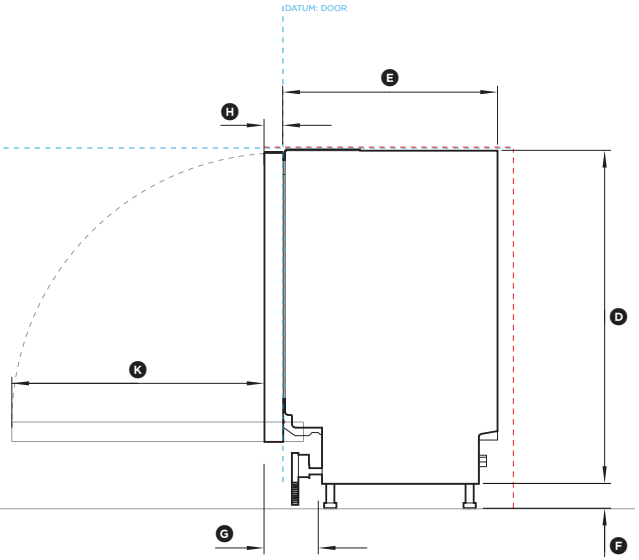

PROFILE VIEW

FISHER & PAYKEL

DATA SHEET

Built-under Dishwasher, 60cm

Model nos:
DW60UC4X2
DW60UC2X2

Product Dimensions	**mm**
(A) Overall height of product*	820 - 880
(B) Overall width of product	597
(C) Overall depth of product	570
(D) Height of chassis	820
(E) Depth of chassis	521
(F) Height of feet*	0 - 60
(G) Depth of toe kick recess	142
(H) Door panel depth	46
(I) Height from top of chassis to bottom of door panel	718
(J) Height from the bottom of door to floor*	103
(K) Depth of door opening	620
(L) Door panel width	590
(M) Door panel height	717

*Depending on adjustment of levelling feet

Minimum Clearances	**mm**
Minimum inside height of cavity*	820
Minimum inside width of cavity	600
Minimum overall depth of cavity	580
Minimum clearance to corner cupboard	13
Minimum clearance to adjacent cupboard door	2

*Depending on adjustment of levelling feet

INDICATES PRODUCT DATUM ----------
INDICATES CABINETRY CLEARANCES ----------

DATE: 21.02.2023 90002985A

IMPORTANT NOTE: Throughout this guide, dimensions may vary by ±2mm (1/16"). Please read the installation guide for detailed information on installing the product. For full installation instructions & specifications visit fisherpaykel.com

0 100 200 400
Millimetres