Model No. DCL180 CORDLESS CLEANER

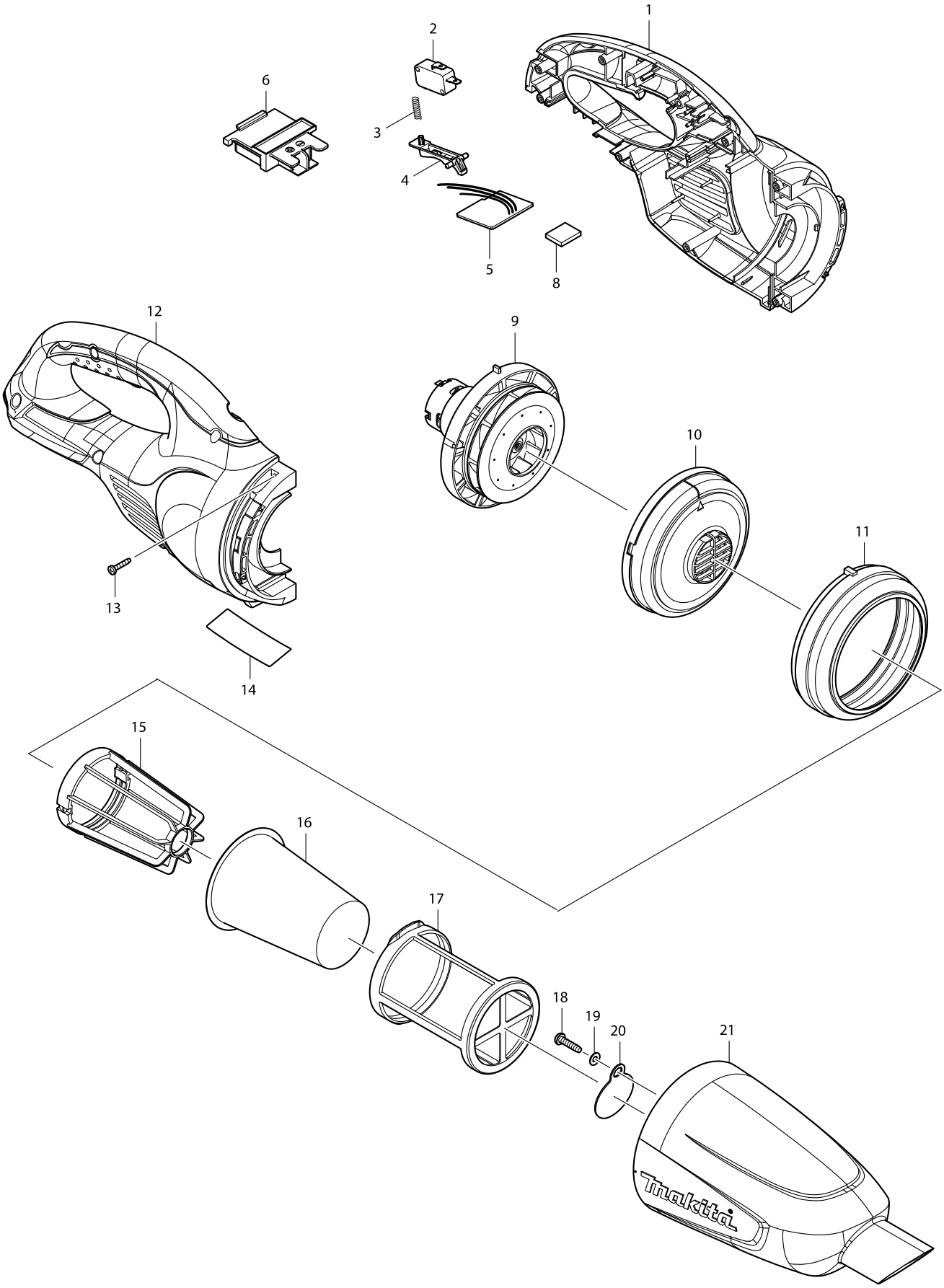

Model No. DCL180 CORDLESS CLEANER

Item	Parts No.	Description	I/C	Qty	N/O	Opt. 1	Opt. 2	Note
001	187458-1	HOUSING SET		1				
C10	424209-4	SPONGE SHEET 50-50		2				
D10		INC. 12						
002	651891-8	SWITCH V-15-3A6		1				
003	231473-8	COMPRESSION SPRING 4		1				
004	451227-9	SWITCH LEVER		1				
005	638935-1	CONTROLLER UNIT		1				
006	643860-3	TERMINAL		1				
008	424248-4	SPONGE SHEET 15-25		1				
009	125867-6	MOTOR ASS'Y		1				
C10	452455-9	BASE		1				
C20	265199-0	+ PAN HEAD SCREW M3X8		2				
C30	240102-2	FAN 82		1				
010	416030-5	FAN COVER		1				
011	424320-2	RUBBER RING		1				
012	187458-1	HOUSING SET		1				
C10	424209-4	SPONGE SHEET 50-50		2				
D10		INC. 1						
013	266429-2	TAPPING SCREW 3X16		7				
014	815F73-4	DCL180 NAME PLATE		1				
015	410237-5	STAY		1				
016	443060-3	FILTER		1				
017	451208-3	PRE-FILTER		1				
018	265995-6	TAPPING SCREW 4X18		1				
019	941051-3	FLAT WASHER 4		1				
020	424208-6	VALVE		1				
021	451235-0	CAPSULE		1				
022	424308-2	SPONGE SHEET 50-36		1				
A01	122859-6	NOZZLE ASS'Y		1				
C10	451410-8	ROLLER		4				
C20	268208-4	PIN 3		4				
C30	424096-1	WIPER		1				
A02	451243-1	SASH NOZZLE		1				
A03	451244-9	PIPE		1				
A04	451245-7	SASH NOZZLE HOLDER		1				

Please order the parts with a part number.

Print Date 24/04/2015