WACKER NEUSON

all it takes!

Operator's Manual
Track Excavator

EZ26



This Operator's Manual includes the AEM Safety Manual

AEM MEMBER

Vehicle Model	**E24-01**
Material Number	**1000507598**
Version	**1.1**
Date	**09/2024**
Language	**[en-US]**

Imprint

Publisher and copyright holder

Wacker Neuson Linz GmbH
Flughafenstraße 7
4063 Hörsching, Austria

Registered office: Hörsching
Register court and number: Linz Regional Court, FN 174794 A
VAT ID No./VAT Number: ATU45389100
Telephone: +43 (0)7221 63000
Fax: +43 (0)7221 63000-2200

www.wackerneuson.at

Original operator's manual

This document may be used by the recipient only for the designated purpose. It may in no way be duplicated or translated in any other language, in whole or in part, without prior permission in writing from the manufacturer.

All rights reserved, in particular the copyright, the right of reproduction and the right of distribution applicable worldwide.Reproduction or translation of this publication, in whole or part, is not permitted without the written consent of Wacker Neuson Linz GmbH.

Violations of legal regulations, in particular of the copyright protection, will be subject to civil and criminal prosecution.

Wacker Neuson Linz GmbH reserves the right to change its products and their technical specifications for further technical development at any time without any claim to changes to machines already delivered. The information in the technical documentation supplied with the product applies in each case.

The machine on the cover is for illustration purposes only and may therefore have special equipment (options).

Wacker Neuson Linz GmbH, responsibility for errors or omissions not accepted, printed in Austria .

Copyright © 2024

California Proposition 65 Warning



⚠ WARNING

The engine exhaust from this product contains chemicals known to the State of California to cause cancer, birth defects, or other reproductive harm.



⚠ WARNING

Diesel engine exhaust and some of its constituents are known to the State of California to cause cancer, birth defects, and other reproductive harm.



⚠ WARNING

Cancer and Reproductive Harm

www.P65Warnings.ca.gov



⚠ WARNING

Batteries, battery posts, terminals and related accessories contain lead and lead compounds, and other chemicals known to the State of California to cause cancer and birth defects or other reproductive harm. WASH HANDS AFTER HANDLING.



Contents

1 Foreword

1.1 Operator’s manual ... 6

1.2 Warranty and liability ... 11

2 Usage

2.1 Use of the vehicle ... 13

2.2 Limits of the vehicle ... 13

3 Safety

3.1 Safety symbols and signal words ... 19

3.2 Qualification of operating personnel ... 20

3.3 Conduct ... 21

3.4 Operating ... 21

3.5 Lifting gear applications ... 24

3.6 Trailer operation ... 25

3.7 Operation of attachments ... 26

3.8 Towing, recovery, loading and transporting ... 27

3.9 Maintenance ... 29

3.10 Measures for avoiding risks ... 31

4 Vehicle Description

4.1 Vehicle view ... 36

4.2 Short description ... 37

4.3 Control elements at the operator station ... 39

4.4 Type plates and labels ... 43

5 Putting into operation

5.1 Entry and exit ... 64

5.2 Setting up the operator station ... 67

5.3 Display ... 81

5.4 Putting the vehicle into operation ... 84

6 Operation

6.1 Brakes ... 97

6.2 Steering ... 97

6.3 Regulating rotational speed ... 98

6.4 Drive ... 99

6.5 Driving with a trailer ... 104

6.6 Lighting and signaling system ... 104

6.7 Washer system ... 108

6.8 Heating, ventilation and air conditioning system ... 109

6.9 Working with the vehicle ... 110

6.10 Operating additional control circuits ... 125

7 Transportation

7.1 Recovery ... 152
7.2 Loading ... 153
7.3 Transport ... 156

8 Maintenance

8.1 Information on maintenance ... 159
8.2 Maintenance accesses ... 159
8.3 Maintenance plan ... 163
8.4 Vehicle fluids ... 169
8.5 Levels ... 171
8.6 Lubricate vehicle and attachments ... 181
8.7 Cleaning and care ... 188
8.8 Electrical system ... 190
8.9 Working hydraulics ... 191
8.10 Engine ... 192
8.11 Tracks ... 195

9 Troubleshooting

9.1 Faults, causes and remedies ... 198
9.2 Error symptoms ... 199

10 Shutdown

10.1 Temporary shutdown ... 203
10.2 Putting back into operation ... 204
10.3 Permanent shutdown ... 204

11 Technical Data

11.1 Dimensions ... 205
11.2 Weights ... 207
11.3 Engine ... 209
11.4 Electrical system ... 210
11.5 Under carriage ... 213
11.6 Hydraulics ... 214
11.7 Emissions ... 214
11.8 Bearing load ... 215
11.9 Lift capacity ... 228

Index ... 237

12 PAL Document Compact Excavator AEM Safety

13 YANMAR WARRANTIES 2023 2025

1 Foreword

1.1 Operator’s manual

1.1.1 Information about this operator’s manual

This operator’s manual provides important information on how to operate the vehicle safely, properly and economically.

The operator’s manual and any supplements must be available in the vehicle at all times. Possible additions can be found at the end of the operator’s manual.

The operator’s manual contains all options. These options are not specifically marked. The vehicle does not necessarily have to have all options.

The vehicle's equipment can also be based on national or regional regulations.

Before starting work for the first time, the operator must read and understand the operator’s manual completely.

QR codes can be found on the vehicle, e.g. on stickers, type plates or in various menu items on displays. These QR codes are not described in detail in this document. For more information, scan the QR code and follow the information online.

Content described in this operator's manual may differ from the current status due to ongoing technical development. This is especially true for software updates.

The contents of this operator’s manual may appear to be incomplete. For example, there may be a **variant 2** but no **variant 1**, or lists in which numbers are missing (e.g. in the case of maintenance covers), etc. This is editorial and intended.

Graphics do not have to be the actual colors shown. They may deviate from the original for better legibility.

For further questions about the vehicle or the operator’s manual, please contact your sales partner.

1.1.2 Storing the operator’s manual

The operator's manual is located in the document box behind the seat or in the compartment under the seat.

1.1.3 Understanding the operator’s manual

1.1.3.1 Target group

These operating instructions are aimed at operating personnel (professional construction site personnel) and the vehicle operator.

A dealer or vehicle rental company must instruct the operator and have this instruction confirmed in writing.

1.1.3.2 Requirements for safe operation

Safe operation of a vehicle depends on the following criteria, among others:

- Vehicle model and equipment
- Maintenance
- Working and driving speed
- Condition of the ground or working environment

Most important are the operator's qualifications and judgment. A well-trained operator who follows the operator's manual and maintenance plan has the greatest impact on the vehicle's life and durability.

The operator acquires the following skills, among others, through proper training:

- Correct assessment of work situations
- Feel for the vehicle
- Assessment of potential hazardous situations
- Safe work processes because correct decisions are made for people, the vehicle and the environment.

The operator is at risk if the vehicle is operated improperly.

Follow the operating procedures and operator's manual described for the vehicle.

Clearly define the responsibilities for the operating personnel and the maintenance personnel.

Access to the vehicle and operation of the vehicle by children and persons under the influence of alcohol, drugs or medication is prohibited.

1.1.4 Abbreviations and explanations

1.1.4.1 Key to the symbols

Symbol	Explanation
1., 2., 3…	Instructions. The order must be followed.
⇨	Result or intermediate result of an action step
✓	Conditions for an activity
●	Enumeration/Instructions for action
-	Sub-enumeration
▶	Avoiding hazards in a warning; Avoiding property damage in a note
[‣52]	Cross reference to a page of this document



Environment

Labeling of instructions, the non-observance of which may endanger the environment.

1.1.4.2 Abbreviations

Symbol	Explanation
Fig.	Figure

Symbol	Explanation
H/Q/T/AUX	Additional control circuit
OO	Operating hours
FOPS	Falling Objects Protective Structure (Protective structure against falling objects)
Hydraulic power coupler	Hydraulic power coupler (e.g. Easy Lock)
max.	maximal
min.	minimal
Mechanical power coupler	Mechanical power coupler
Item	Position
ROPS	Roll Over Protective Structure (Protective structure against roll over without loss of the floor contact)
TOPS	Tip Over Protective Structure (Protective structure against tipping over)

Color code

Code	Color
BU	blue
GN	green
RD	red
YE	yellow

1.1.4.3 Units of measurement

Volumes	
1 cm³	(0.061 in³)
1 m³	(35.31 ft³)
1 ml	(0.034 US fl.oz.)
1 liters	(0.26 gal)
1 liter/min	(0.26 gal/min)

Length	
1 mm	(0.039 in)
1 m	(3.28 ft)

Weight	
1 kg	(2.2 lbs)
1 g	(0.035 oz)

Pressure	
1 bar	(14.5 psi)
1 kg / cm²	(14.22 lbs/in²)

Force/output	
1 kN	(224.81 lbf)
1 kW	(1.34 hp)
1 PS	(0.986 hp)

Torque	
1 Nm	(0.74 ft.lbs.)

Velocity	
1 km/h	(0.62 mph)

Acceleration	
1 m/s²	(3.28 ft/s²)

1.1.4.4 Glossary

Not all glossary entries necessarily apply to the vehicles described in the operator's manual.

Outriggers	Track excavator: dozer blade Mobile excavator: dozer blade and/or claws
Attachment	All interchangeable equipment (e.g. buckets) approved by Wacker Neuson and designed for working with the vehicle.
Work light	Work lights illuminate the work area of the vehicle.
Basic vehicle	Vehicle without options
Operator	A person who drives or works with the vehicle.
Operating personnel	Persons responsible for the operation, daily maintenance and cleaning of vehicles.
Recovery	The excavator is pulled out of the immediate risk zone (e.g. level crossing or construction site area).
Bystander	People who support the hoist operation or the briefing.
DEF	Diesel Exhaust Fluid = urea solution
DOC	Diesel oxidation catalyst; removes carbon monoxide and unburnt fuel residues from the exhaust gas
DPF	Diesel particulate filter; burns soot particles from the exhaust gas
Eco mode	Eco mode saves fuel and reduces emissions. A vehicle can be equipped with an automatic or manual eco mode.
Place of use	The place, where a vehicle is operated. Depending on the vehicle category, this can be e.g., construction site or an agricultural farm.
EU Stage V/Tier 4	The vehicles meet different emission standards depending on their equipment. If necessary (e.g. during operation), motor variants are described separately. **EU Stage V** and **Tier 4** are examples. Other emission standards may also be specified in this document.
Vehicle	Unless otherwise stated, the term **vehicle** refers to the earth-moving machine described in this operator's manual. The vehicle may also be referred to as an **excavator** or **dumper**, for example, to avoid confusion with other vehicles.
Deactivate the vehicle safely	Park the vehicle on a stable surface so that it cannot tip over. Activate the parking brake on mobile excavators. If necessary, take additional measures: Track excavator: Lower the attachment and dozer blade to the ground. Mobile excavator: Lower the attachment, dozer blade and claws onto the ground.
Vehicle operator	A company that operates a vehicle. A person who operates a vehicle.
Vehicle operation	All work (e.g. transporting material, maintenance work) that may or must be carried out by an operator.

Danger zone	The danger zone is the area in which persons are at risk by the movements of the vehicle, the attachment or the material.
Lifting capacity chart	A lifting capacity chart shows the maximum weight that can be lifted in a given boom position during excavation. If the upper carriage is rotated during this process, the values in the **load capacity chart** must be adhered to.
HVO	Hydrotreated Vegetable Oils Non-fossil alternative to diesel made from renewable raw materials. The use of HVO reduces CO_2 and nitrogen oxides. The vehicle can be filled with HVO ex works. Conversion to HVO does not affect the vehicle's serviceability. All maintenance intervals remain unchanged. Any mixing ratio between HVO and diesel is possible.
Inspection	Technical examination of a vehicle by an authorized service center at defined intervals.
Joystick base	The left, folding joystick base.
Cab	Closed safety component for the operator. In this operator's manual, the term **cab** is used as an example for canopy and cab. If necessary, these two safety components are described separately.
Creep	Driving as slowly as possible and without jerking.
Hose breakage	Hydraulic oil exits a hydraulic hose at high pressure.
Check screw connections for tightness	Check screw connections and associated components for tightness by visual check or manually (without using a tool). In case of loose screw connections, contact authorized service center.
SCO	Selective catalytic oxidation
SCR	Selective catalytic reaction
Visual aids	Examples of visual aids are rearview mirrors, camera monitors, but also persons who support the operator during vehicle operation.
Load capacity chart	A load capacity chart shows the maximum weight that can be lifted in a given boom position during excavation. With this weight, the upper carriage can turn 360° with the dozer blade raised without the vehicle tipping over. The vehicle may travel very slowly ("creep").
Loading weight	The actual weight a vehicle has at the time of an upcoming transportation. The loading weight refers to vehicles equipped with options approved by Wacker Neuson.
Additional control circuits	Additional control circuits required for certain attachments. • AUX I/H1: Auxiliary control circuit (e.g., hydraulic hammer, swivel bucket) • AUX II/H2: 3rd control circuit (e.g. universal gripper) • AUX III/H3: e.g. Powertilt • AUX IV/Q1: Hydraulic power coupler system (e.g. Easy Lock) • AUX V: Pendulum gripper • T1: Return line

1.1.4.5 Direction indications

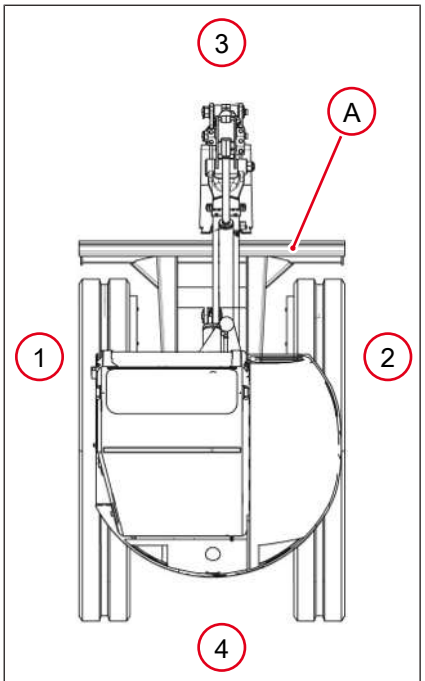

Fig. 1: Direction indications

These terms are used from the point of view of an operator in the cab when the front of the cab faces the stabilizer blade **A**.

- 1: Left
- 2: Right
- 3: Front
- 4: Rear

1.2 Warranty and liability

1.2.1 Warranty

Warranty claims can only be made under the following conditions:

- The **general terms and conditions** and the **warranty conditions** of the sales partners of Wacker Neuson Linz GmbH must be observed.
- All instructions in this document must be followed.
- All maintenance work must be carried out according to the maintenance intervals in this document.
- Only carry out maintenance work that is described in this operator's manual.
- Do not perform any maintenance work that is marked as **authorized service center**.

1.2.2 Disclaimer

The warranty and product liability of Wacker Neuson Linz GmbH shall expire in the following cases in the event of personal injury or damage to property:

- Failure to comply with the safety and warning instructions on the vehicle, and in all documents supplied with the vehicle.
- Non-compliance with the intended use of the vehicle.
- Violation of the duty of care during operation, handling, care and maintenance and repair – even if no specific reference is made to this duty of care.
- Unauthorized modifications to the vehicle or the use of spare parts, accessories, attachments and special equipment not approved by Wacker Neuson Linz GmbH. This will invalidate the vehicle's conformity and approval.
- Changes approved by Wacker Neuson Linz GmbH may only be carried out by an authorized service center.
- Changes and modifications to the vehicle that result in restricted visibility. This will invalidate the vehicle's conformity and approval.

2 Usage

2.1 Use of the vehicle

The vehicle is intended to be used for:

- Only the attachments approved by Wacker Neuson must be used for loosening and moving earth, gravel and rubble as well as for the hammer operation, gripper operation and other operations. See **Technical data of the attachment**.
- Any use beyond this shall not be considered as intended use. Wacker Neuson shall not be not liable for any resulting damage; the risk is borne solely by the operator/operating company.

  Intended use also involves observing the instructions in the operator's manual and complying with the maintenance and servicing conditions.
- The vehicle may not be used on public roads.
- In lifting gear applications, the intended use is only guaranteed if the prescribed equipment is available and functional.
- Only use the power coupler with the associated attachments.
- A restricted work area applies to work with an attachment (e.g. hammer) which can result in fragments flying around.
- Observe national and regional regulations.

2.2 Limits of the vehicle

2.2.1 Danger zone

- The danger zone is the area in which persons are at risk by the movements of the vehicle, the attachment or the material.
- The danger zone also includes the area that can be reached by falling loads, a falling device or ejected parts.
- The danger zone on slopes differs from the level. Secure cargo.
- Stop work immediately if persons are in the danger zone.
- Block off the danger zone if an adequate safety distance cannot be maintained.
- Extend the danger zone sufficiently in the immediate vicinity of buildings, scaffolds or other elements of construction.

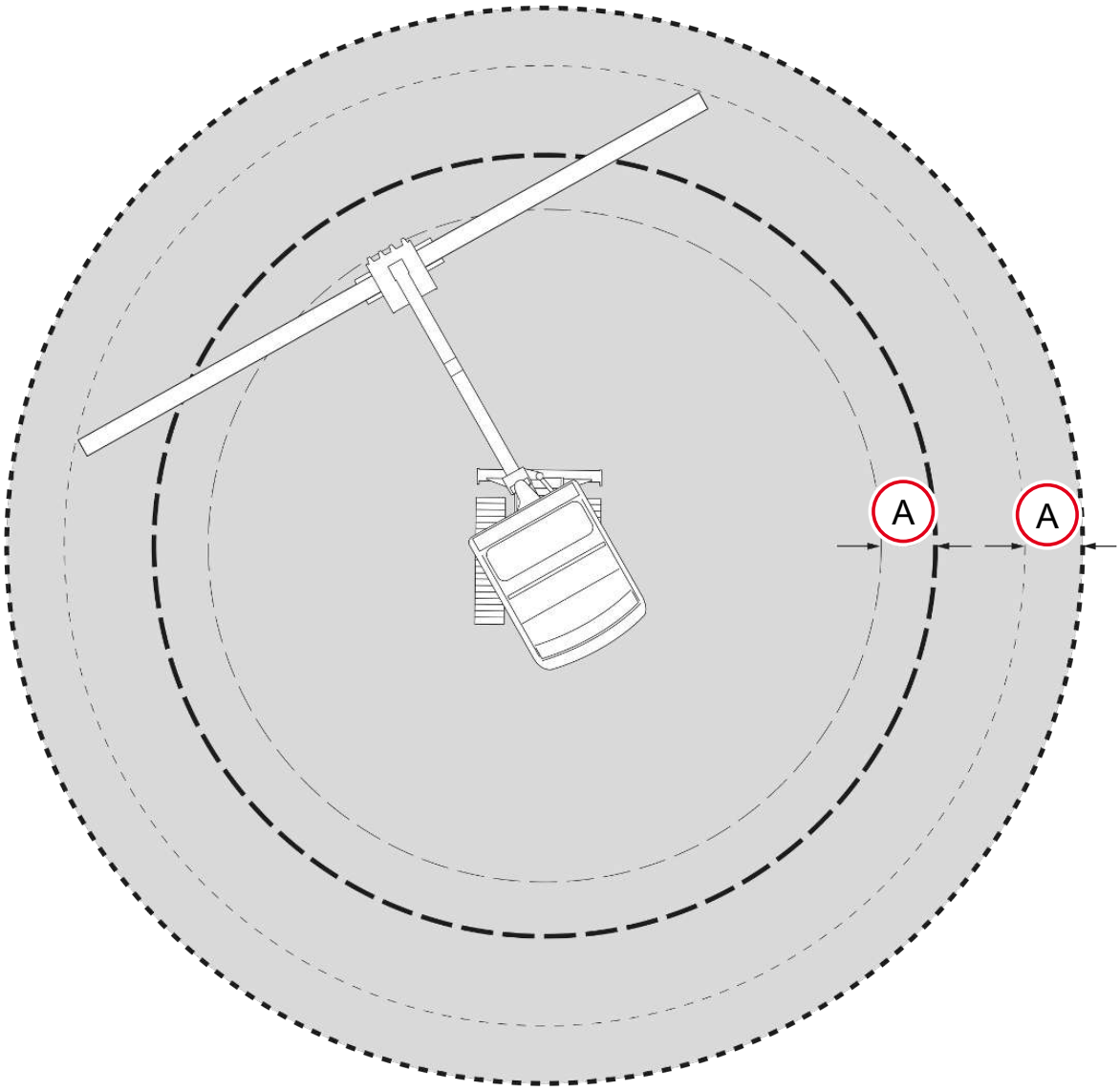

Fig. 2: Danger zone

– — –	Danger zone with a bucket
– — –	Danger zone with one bucket and a safety distance of 1.5 m (59 in)
- - - - - -	Danger zone with an attached gripper (e.g. picking up a pipe)
- - - - - -	Danger zone with an attached gripper and a safety distance of 1.5 m (59 in)

A= Safety distance of 1.5 m (59 in)

Danger zone during lifting gear application

When using lifting gear, sling loads (**B** must be stabilized with ropes (**C**).

The slings must be outside the danger zone.

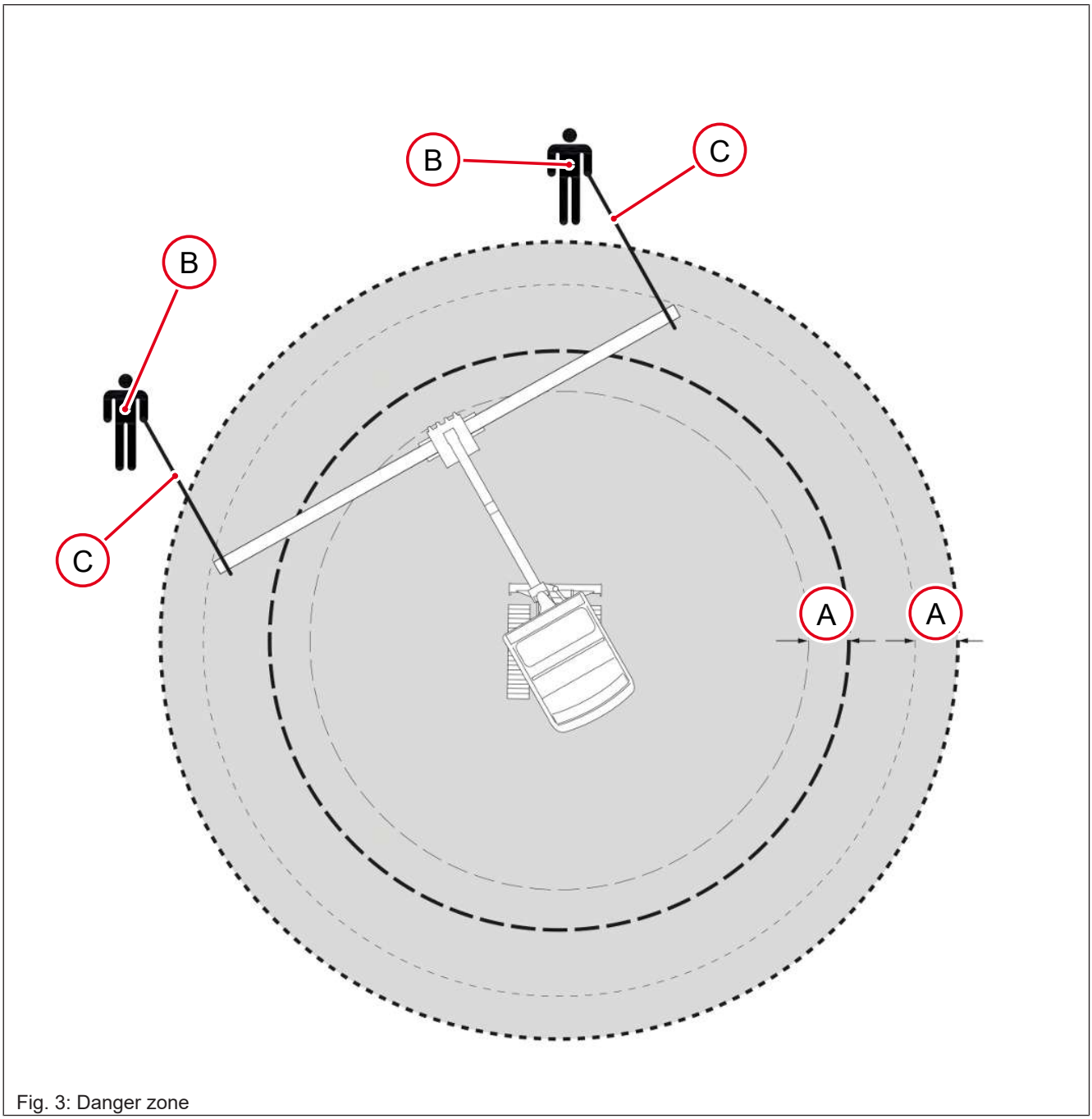

Fig. 3: Danger zone

– — –	Danger zone with a bucket
– — –	Danger zone with one bucket and a safety distance of 1.5 m (59 in)
- - - - - -	Danger zone with an attached gripper (e.g. picking up a pipe)
- - - - - -	Danger zone with an attached gripper and a safety distance of 1.5 m (59 in)

A = Safety distance of 1.5 m (59 in)

- Do not approach the edge of an unsecured excavation.
- Do not drive or work under earthen projections.
- Before starting work on the roof or suspended ceilings of buildings, check the load-bearing capacity of the subsurface.

2.2.2 Operating limits

Operating limits for driving on slopes

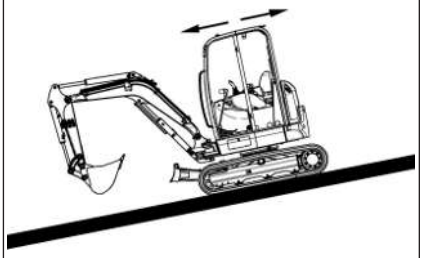	**Driving uphill and downhill (downhill arm system)** Permitted up to a slope of **30°**
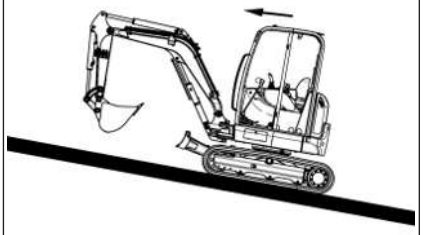	**Driving uphill (arm system uphill)** Permitted up to a slope of **15°**
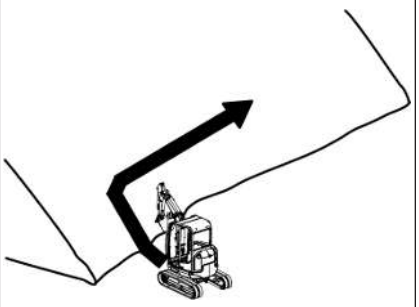	**Lateral slope drive** Permitted up to a slope of **15°**

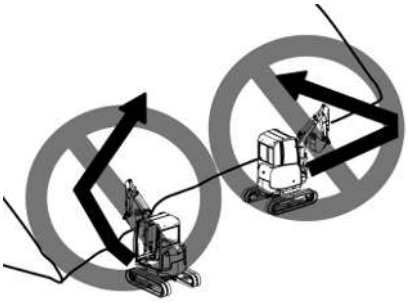	**Diagonal drive** Prohibited
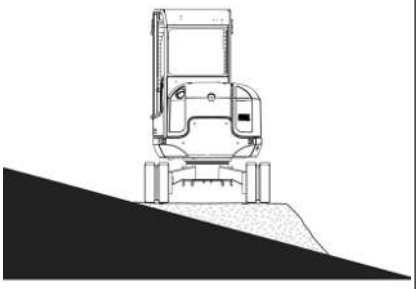	**Working on lateral slopes** Only permitted on a horizontal, load-bearing and level surface. If the slope is too steep, pile up material to create a horizontal, load-bearing, level footprint.

2.2.3 Operating temperature range

Operate the vehicle only at outside temperatures between -15 °C (5 °F) and +45 °C (+113 °F).

2.2.4 Operation in water

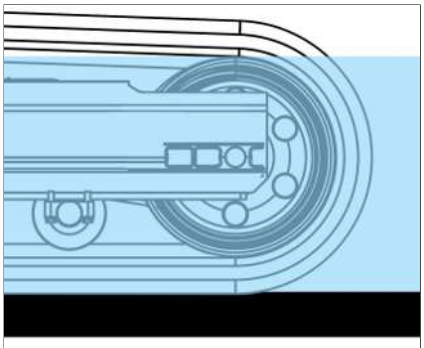

Fig. 4: Operating in water (symbolic representation)

The vehicle may only stand in water up to the upper edge of the tension wheel.

Lubricate lubrication points which have been under water for longer periods of time until only new grease is left in the lubrication points.

The slewing ring and the upper carriage must not be immersed under water.

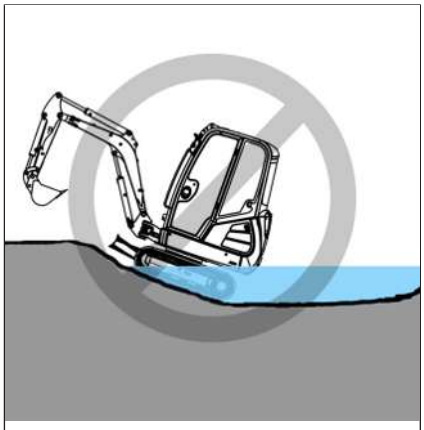

Fig. 5: Extend (symbolic representation)

Operating in a salty environment

Clean the vehicle regularly when used in a salty environment. Operation in salt water and in the vicinity of aggressive media (e.g. salt deposits) is prohibited.

2.2.5 Sea level

Information about see levels indicates approximate values which depend on various environmental factors. The actual value may differ.

3 Safety

3.1 Safety symbols and signal words

The following symbol identifies safety instructions. It is used for warning against potential personal risk or danger.



⚠ DANGER

DANGER identifies a situation causing death or serious injury if it is not avoided.

Consequences in case of non-observance.

► Avoidance of injury or death.



⚠ WARNING

WARNING identifies a situation that can cause death or serious injury if it is not avoided.

Consequences in case of non-observance.

► Avoidance of injury or death.



⚠ CAUTION

CAUTION identifies a situation that can cause injury if it is not avoided.

Consequences in case of non-observance.

► Avoidance of injury.



NOTICE

INFORMATION identifies a situation that causes damage if it is not observed.

Consequences in case of non-observance.

► Avoidance of damage to property.

3.2 Qualification of operating personnel

3.2.1 Owner’s duties

- Only allow specifically authorized, trained and experienced persons to operate, drive and perform maintenance on the vehicle.
- Do not allow persons to be trained or instructed by anyone other than an authorized and experienced person.
- Have persons to be trained or instructed practice under supervision until they are familiar with the vehicle and its behavior (for example with the steering and braking behavior).
- Access to the vehicle or vehicle operation is prohibited for children and persons under the influence of alcohol, drugs or medicine.
- Clearly and unequivocally define the responsibilities of the operating and maintenance personnel.
- Clearly and unequivocally define the responsibilities on the work area, also in view of traffic regulations.
- Give the operator the authority to refuse safety instructions from third parties.
- Have the vehicle serviced and repaired only by an authorized service center.

3.2.2 Required knowledge of the operator

- The operator is responsible for third parties.
- Avoid any operational mode that might pose a risk to safety.
- The specific national driving license is required.
- The vehicle may only be operated by authorized and safety-conscious persons.
- The operator and owner are obligated to operate the vehicle only in a safe and working condition.
- All persons working on or with the vehicle must have read and understood the safety instructions in this operator’s manual before starting work.
- Follow, and instruct the operator in, legal and other mandatory regulations relevant to accident prevention.
- Observe and instruct the operator in regulations regarding road traffic and environmental protection.
- Use only the defined accesses for getting on and off the vehicle.
- Be familiar with the emergency exit of the vehicle.

3.2.3 Preparatory measures for the operator

- Before starting, check the vehicle whether it can be driven and operated safely.
- Increased caution if the driver has untied, long hair or wears jewelry.
- Wear close-fitting work clothes that do not hinder movement.

3.3 Conduct

Prerequisites for operation

- The vehicle has been designed and built in accordance with state-of-the-art standards and the recognized safety regulations. Nevertheless its use can cause danger to the operator or third parties, or damage to the vehicle.
- Store this operator's manual in the place provided for this in or on the vehicle. Immediately replace a damaged or illegible operator's manual and any supplements to it.
- The vehicle must only be operated in accordance with its designated use and the instructions set forth in this operator's manual.
- The operator and owner are obligated to operate the vehicle only in a safe and working condition.
  - If a damage or malfunction occurs during operation, put the vehicle out of operation immediately and secure it against restart.
  - Have all malfunctions jeopardizing the safety of the operator or third parties immediately repaired by an authorized service center.
- Do not put the vehicle into operation or operate it after an accident; have it inspected for damage by an authorized service center.
  - Pay particular attention to damage to the cab and protective structures.
- Keep climbing aids (handholds and footholds) free from dirt, snow and ice.
- The owner is responsible for requiring the operating and maintenance personnel to wear protective equipment as required by the circumstances.

3.4 Operating

3.4.1 Preparative measures

- Operation is only allowed with correctly installed and intact protective structures.
- Keep the vehicle clean. This reduces injury, accident and fire hazards.
- Safely store objects you carry with you in the places provided for this (for example in the storage compartment, drinks holder).
- Do not carry objects with you that protrude into the operator's work space. They can create another danger in case of an accident.
- Observe all safety and information labels.
- Ensure that all safety devices are properly installed and functional before starting work.
- Before starting work or after interrupting work, ensure that the brake, steering, signaling and light systems are functional.
- Before commissioning the vehicle, ensure that nobody is in the danger zone.

3.4.2 Job site

- The operator is responsible for third parties.
- Before starting work, familiarize yourself with the job site. This applies to, for example:
  - Obstacles in the work area and vehicle travel area.
  - Any barriers separating the job site from public roads.
  - Load-bearing capacity of the soil.
  - Existing overhead and underground lines.
  - Special operating conditions (e.g. dust, steam, smoke, asbestos).
- The operator must know the maximum dimensions of the vehicle and the attachment.
- Maintain a safe distance (e.g. from buildings, edges of building pits).
- When working in buildings or in enclosed areas, pay attention to:
  - Ceiling heights and passage heights.
  - Width of the entrances and passages.
  - Maximum ceiling load and maximum ground load.
  - Sufficient room ventilation (e.g. danger of carbon monoxide poisoning).
- Use existing visual aids to stay aware of the danger zone.
- In conditions of darkness and poor visibility, switch on existing work lights and ensure that motorists are not blinded by these lights.
- If the existing lights of the vehicle are not sufficient for performing work safely, ensure additional lighting of the job site.
- Hot vehicle parts and exhaust gases increase the risk of fire.

3.4.3 Danger zone

- The danger zone is the area in which persons are at risk by the movements of the vehicle, the attachment or the load.
- The danger zone also includes the area that can be reached by falling load, a falling device or ejected parts.
- Extend the danger zone sufficiently in the immediate vicinity of buildings, scaffolds or other elements of construction.
- Seal off the danger zone should it not be possible to keep a sufficient safety distance.
- When persons are in the danger zone, stop work immediately.

3.4.4 Transporting passengers

- Transporting passengers with the vehicle is not allowed.
- Transporting persons on and in attachments is not permitted.
- Transporting persons on and in trailers is not permitted.

3.4.5 Mechanical integrity

- The operator and owner are obligated to operate the vehicle only in a safe and working condition.
- Only operate the vehicle if all protective and safety-related equipment (e.g. protective structures such as cab or roll bar, detachable protective devices) are installed and functional.
- Check the vehicle for visible damage and defects.
- If a damage or malfunction occurs during operation, put the vehicle out of operation immediately and secure it against restart.
- Have all malfunctions jeopardizing the safety of the operator or third parties immediately repaired by an authorized service center.

3.4.6 Starting the engine of the vehicle

- Start the engine only according to the operator's manual.
- Observe all warning lights and control lights.
- Do not use any liquid or gaseous starting aids (e.g. ether or starting fuel).

3.4.7 Vehicle operation

- Start and operate the vehicle only with the seat belt fastened and only from the place provided for this.
- Put the vehicle into operation only if visibility is sufficient (have another person guide you if necessary).
- When parking on slopes:
  - Travel or work only uphill or downhill.
  - Avoid vehicle travel across a slope, observe the vehicle's permissible inclination (and of the trailer if necessary).
  - Keep loads on the uphill side of the vehicle and as close as possible to it.
  - Keep attachments close to the ground.
- Adapt the travel speed to the circumstances (e.g. the ground conditions, weather conditions).
- There is increased danger during backward vehicle travel. Persons in the blind spot of the vehicle cannot be seen by the operator.
  - Ensure that nobody is in the danger zone when you change the travel direction.
- Never get on a moving vehicle and never jump off the vehicle.

3.4.8 Vehicle travel on public roads and sites

- The specific national driving license is required.
- When driving on public roads or sites, observe the national regulations (e.g. road traffic regulations).
- Ensure that the vehicle is in compliance with the national regulations.
- In order not to blind other motorists, using the existing work lights during vehicle travel on public roads or sites is prohibited.
- When crossing underpasses, bridges, tunnels, e.g. ensure that the clearance height and width is sufficient.
- The mounted attachment must be approved for driving on public roads or sites (see the registration papers).
- When transferring the vehicle on public roads, the attachment must be brought into transport position and emptied.
- The prescribed lighting and protective devices must be mounted on the attachment.
- Take measures against unintentional operation of the working hydraulics.
- If the vehicle has different steering modes, ensure that the mandatory steering mode is selected.

3.4.9 Parking the vehicle

Stopping the engine of the vehicle

- Stop the engine only according to the operator's manual.
- Before stopping the engine, lower the attachment to the ground.

3.4.10 Securing the vehicle

- Unbuckle the seat belt only after stopping the engine.
- Secure the vehicle from rolling away before leaving the vehicle (e.g. parking brake, suitable chocks).
- Remove the starting key and secure the vehicle against unauthorized operation.

3.5 Lifting gear applications

3.5.1 Requirements

- Have loads fastened and the operator guided by a qualified person who has specific knowledge of lifting gear applications and the usual hand signals.
- The person giving instructions to the operator must stay in visual contact with the operator when fastening, guiding or removing the load (maintain visual contact).
- If this not be possible, ask one more person with the same qualifications to guide.

3.5.2 Fastening, guiding and removing loads

- Follow the applicable specific regulations for fastening, guiding and removing a load.
- Wear protective equipment when fastening, guiding and removing loads (e.g. a hard hat, safety glasses, protective gloves, safety shoes).
- Do not place lifting and fastening gear over sharp edges or rotating parts. Loads must be fastened so as to prevent them from slipping or falling.
- Move loads only on horizontal, level and firm ground.
- Move loads close to the ground.
- In order to avoid oscillating movements of loads:
  - Perform smooth, slow movements with the vehicle.
  - Use cables to guide the load (do not use hands to guide).
  - Bear in mind the weather conditions (for example the wind force).
  - Keep a minimum safety distance from objects.
- The operator may allow the load to be fastened and removed only if the vehicle and its attachment are not being moved.
- Danger zones must not overlap with the work zones of other vehicles.

3.5.3 Lifting gear applications

- The vehicle and the attachment must be certified for lifting gear applications.
- Observe the national regulations for lifting gear applications.
- Lifting gear applications are procedures involving raising, transporting and lowering loads with the help of lifting and fastening gear.
- The help of an accompanying person is necessary for fastening, guiding and removing the load.
- There must be nobody under the load.
- Stop the vehicle immediately and stop the engine if persons enter the danger zone.
- Only operate the vehicle in lifting gear applications if the prescribed lifting gear (e.g. joint rod linkage and load hook) and safety equipment are present and functional (e.g. visual and audible warning equipment, line break protection, stability table).
- Use only lifting and fastening gear certified by a test or certification body, observe the inspection intervals. Adhere to the inspection intervals .
- Only use undamaged attachments and shackles. No belts, slings or cables.
- Do not use any lifting and fastening gear that is dirty, damaged or not of sufficient size.
- Do not interrupt the work process with a load attached.

3.6 Trailer operation

- The vehicle is not authorized for trailer operation.

3.7 Operation of attachments

3.7.1 Attachments

- Only use attachments that are certified for the vehicle or its protective equipment (for example splinter protection).
- All other attachments require the vehicle manufacturer’s release.
- The danger zone and the work area depend on the attachment used.
  - See charger operator’s manual.
- Secure the load.
- Do not overload the attachment - observe the permitted vehicle payloads.
- Check the correct position of the lock.

3.7.2 Operating

- Transporting persons on/in an attachment is prohibited.
- Installing a work platform is prohibited.
  - Exception: The vehicle is certified and equipped with the necessary safety equipment.
- Attachments and counterweights modify handling, as well as the steering behavior and brake capability of the vehicle.
- The operator must be familiar with these modifications and act accordingly.
- Before starting work, operate the attachment to check that it works correctly.
- Before putting the attachment into operation, ensure that nobody is at risk

3.7.3 Removing and fitting attachments

- Before coupling or uncoupling hydraulic connections:
  - Stop the engine.
  - Releasing the pressure from the working hydraulics.
- Picking up and lowering attachments to the ground requires special care:
  - Pick up and safely lock the attachment in accordance with the operator’s manual,
  - Lower the attachment only to firm, level ground and secure it to prevent it from tipping over or rolling away.
- Put the vehicle and the attachment into operation only if:
  - The protective equipment has been installed and is functional.
  - The connections for the lights and the hydraulic system have been established and are functional.
- Carry out a visual inspection of the locking mechanism. Work must not be carried out before correct locking has been clearly established.
- There must be nobody between the vehicle and the equipment when picking up or lowering an attachment to the ground.

3.8 Towing, recovery, loading and transporting

3.8.1 Recovery

- Seal off the danger zone.
- For recovery, hire a towing service or an authorized service center.
- No persons are allowed to be in the area of the recovery equipment. The safety distance is 1.5 times the length of the recovery equipment.
- Do not use the towing device to recover the vehicle.
- Check the recovery equipment for damage before recovery.
- Only use recovery equipment approved by a testing laboratory or certification body. Adhere to the inspection intervals .
- Fasten recovery equipment only at the defined points.
- A vehicle of at least the same weight category must be used as the tractor vehicle. Furthermore, the tractor vehicle must be equipped with a safe braking system and sufficient tractive power.
- After recovery, tow the vehicle only in accordance with this operator's manual in order to avoid damage to the vehicle.

3.8.2 Crane-lifting

- Seal off the danger zone.
- The crane and the lifting gear must have suitable dimensions.
- Take into account the vehicle's overall weight.
- Wear protective clothing and equipment when fastening, guiding and removing the vehicle (for example a hard hat, safety glasses, safety boots).
- Use only lifting and fastening gear certified by a test or certification body, observe the inspection intervals.
- Do not use any lifting and fastening gear that is dirty, damaged or not of sufficient size.
- Visually inspect to ensure that all attachment points are not damaged or worn (e.g. no widening, no sharp edges, no cracks).
- Have loads fastened and crane operators only guided by experienced persons.
- The person guiding the crane operator must be within sight or sound of him.
- Observe all movements of the vehicle and lifting gear.
- Secure the vehicle against unintentional movement.
- Raise the vehicle only after it is safely attached and the signalman has given his approval.
- Use only the slinging points provided for fastening the lifting gear (for example cables, belts).
- Do not attach the vehicle by twining the lifting gear (for example cables, belts) around it.
- Ensure an even load distribution when fastening the lifting gear.
- Ensure that no one is in, on or under the vehicle when loading the vehicle.
- Observe the national regulations.
- Load the vehicle only in accordance with this operator's manual to avoid damage to the vehicle.
- Do not raise a vehicle that is stuck or frozen onto the ground, for example.
- Bear in mind the weather conditions (for example the wind force).

3.8.3 Transporting

- For the safe transportation of the vehicle:
  - The transport vehicle must have a sufficient bearing load and loading surface.
  - The maximum weight rating of the transport vehicle must not be exceeded.
- Use only lifting and fastening gear certified by a test or certification body, observe the inspection intervals. Adhere to the inspection intervals .
- Do not use any lifting and fastening gear that is dirty, damaged or not of sufficient size.
- In order to secure the vehicle on the loading surface, use only the fastening points provided for this purpose.
- Ensure that nobody is in or on the vehicle during transporting.
- Observe the national regulations.
- Bear in mind the weather conditions (e.g. ice, snow).
- Ensure the minimum load on the steering axle(s) of the transport vehicle, and ensure an even load distribution.

3.9 Maintenance

3.9.1 Maintenance

- Observe the intervals prescribed by law and those specified in this operator’s manual for routine checks/inspections and maintenance.
- For maintenance activities, ensure that all tools and service center equipment are adapted to the performance of the task described in this operator’s manual.
- Do not use any damaged or malfunctioning tools.
- The vehicle and the engine must be stopped during maintenance.
- Once maintenance is over, correctly install safety equipment again that has been removed.
- Wait for the vehicle to cool down before touching components.

3.9.2 Personal safety measures

- Avoid any operational mode that might pose a risk to safety.
- Wear protective equipment (for example hard hat, protective gloves, safety shoes).
- Tie back long hair and remove all jewelry.
- If maintenance on a running engine cannot be avoided:
  - only work in groups of two.
  - Both persons must be authorized and trained for the operation of the vehicle.
  - Keep a safe distance from rotating parts (e.g. from fan blades, belts).
  - Keep a sufficient distance to hot parts (e.g. exhaust system).
  - Perform maintenance only in well-ventilated rooms or rooms with an exhaust-gas suction system.
- Safely lock or support vehicle components before starting work.
- Take special care when working on the fuel system due to the increased risk of fire.

3.9.3 Preparative measures

- Attach a warning label to the control elements (e.g. “Vehicle being serviced, do not start”).
- Before performing assembly work on the vehicle, support the areas to be serviced and use suitable lifting and supporting equipment for the replacement of parts over 9 kg.
- Perform maintenance only if:
  - the vehicle is positioned on firm and level ground.
  - the vehicle is secured against rolling away (e.g. parking brake, chocks) and the attachment is placed on the ground.
  - The engine is stopped.
  - the starting key has been removed.
  - the pressure in the working hydraulics has been released.
- If maintenance has to be performed under a raised vehicle or attachment, support the vehicle or attachment (e.g. with a lift platform, trestles) to ensure safety and stability.
- Hydraulic cylinders or jacks alone do not sufficiently secure a raised vehicle or attachment.

3.9.4 Measures for performing maintenance

- Perform only the maintenance described in this operator's manual.
- All work that is not described in this operator's manual must be performed by qualified and authorized technically trained personnel.
- Follow the maintenance plan.
- Always use specially designed or otherwise safety-oriented ladders and working platforms to perform overhead maintenance. Do not use vehicle parts or attachments as a climbing aid.
- Do not use attachments as a lift platform for persons.
- Keep climbing aids (handholds and footholds) free from dirt, snow and ice.
- Disconnect the negative terminal of the battery before working on the electrical system.

3.9.5 Modifications and spare parts

- Do not modify the vehicle and the attachment (e.g. the safety devices, lighting, tires, straightening and welding work).
- Modifications must be approved by the manufacturer and performed by an authorized service center.
- Use only original spare parts.

3.9.6 Protective structures

- The cab, roll bar and protective screen are tested protective structures and may not be changed (e.g. no drilling, bending, welding).
- Perform a visual check according to the maintenance plan (for example check fastenings for damage).
- If damage or defects are detected, have them immediately checked and repaired by an authorized service center.
- Only have protective structures retrofitted or replaced by an authorized specialist workshop.
- Replace self-locking fasteners (for example self-locking nuts) by new ones after removing them.

3.10 Measures for avoiding risks

3.10.1 Tracks

- Repair work on tracks may only be carried out by trained technical personnel.
- Check tracks for correct tension and externally visible damage (e.g. cracks, cuts).
- Special care must be taken on slippery surfaces (e.g. steel plates, ice) as there is a high risk of slipping.
- Only use approved tracks.

3.10.2 Hydraulic and compressed-air system

- Check all lines, hoses and screw connections regularly for leaks and visible damage.
- Splashed oil can cause injury and fire.
- Leaking hydraulic and compressed-air lines can cause the full loss of the braking effect.
- Have damage and leaks immediately repaired by an authorized service center.
- Check the hydraulic hoses at the recommended intervals and have them replaced.

3.10.3 Electrical system

- Use only fuses with the specified current rating.
- In case of damage or malfunction in the electrical system:
  - Put the vehicle out of operation immediately and secure it against restart.
  - Actuate the battery master switch.
  - Disconnect the battery.
  - Have the fault repaired.
- Ensure that work on the electrical system is only performed by technically trained personnel.
- Regularly check the electrical system. Have malfunctions repaired immediately (for example loose connections, scorched cables).

3.10.4 Battery



⚠ WARNING

CALIFORNIA: Proposition 65 (Law of 1986 on toxic substances and safe drinking water) Warning!

Battery terminals, clamps and similar parts contain lead and lead compounds. These chemicals are considered by the State of California to be the cause of cancer and reproductive harm.

► Wash hands after working on the battery.

- Batteries contain caustic substances (for example sulfuric acid). When handling the battery observe the specific safety instructions and regulations relevant to accident prevention.
- A volatile oxyhydrogen mixture forms in batteries during normal operation and especially during charging. Always wear gloves and eye protection when working with batteries.
- Do not perform battery maintenance near open flames.
- Perform battery maintenance only in well-ventilated areas (e.g. due to vapors harmful to health, explosion hazard).
- Starting the vehicle with battery jumper cables is dangerous if performed improperly. Observe the safety instructions regarding the battery.

3.10.5 Safety instructions regarding internal combustion engines



⚠ WARNING

CALIFORNIA: Proposition 65 (Law of 1986 on toxic substances and safe drinking water) Warning!

Engine exhaust, some of its components and certain components contain or release chemicals that are classified by the State of California to cause cancer, birth defects or reproductive harm.

- Internal combustion engines present special hazards during operation and fueling.
- Failure to follow the warnings and safety instructions can cause serious injury or death.
- Keep the area around the exhaust system free of flammable materials.
- Check the engine and fuel system for leaks (e.g. loose fuel lines). Don't start or let the engine run in case of leaks.
- Breathing the exhaust fumes causes death very quickly.
- Engine exhaust fumes contain invisible and odorless gases (e.g. carbon monoxide and carbon dioxide).
  - Operate the vehicle only on appropriately ventilated areas.
- The respective safety instructions must be observed when using the vehicle in areas where there may be explosion hazards.
- Do not touch the engine, exhaust system and cooling system as long as the engine is still running or has not cooled down yet.
- Do not remove the filler cap of the radiator when the engine is running or hot.
- The coolant is hot, under pressure and can cause serious burns.

3.10.6 Handling oil, grease and other substances

- Observe the safety data sheet when handling oils, greases and other chemical substances (e.g. battery acid, coolant, urea solution).
- Wear appropriate protective equipment (e.g. protective gloves, safety glasses).
- Be careful when handling hot vehicle fluids and consumables – there is a risk of burning and scalding.
- Only work with corresponding personal protective equipment, e.g. respiratory protection in exposed areas (e.g. dust, steam, smoke, asbestos).
- Do not operate the vehicle in radioactively, biologically or chemically contaminated areas.

3.10.7 Fire hazard

- Fuel, lubricants, grease and coolants are flammable.
- Do not use flammable detergents.
- Keep the area around the exhaust system free of flammable materials.
- Hot vehicle parts and exhaust gases increase the risk of fire.
  - Stop and park the vehicle only in safe areas.
- If the vehicle is equipped with a fire extinguisher, have it installed in its specific location.
- Keep the vehicle clean. This reduces fire hazards.

3.10.8 Working near electric supply lines

- Before performing any work, the operator must check whether there are any electrical supply lines in the designated work area.
- If there are electrical supply lines, only a vehicle with cab may be used (Faraday cage).
- Keep a safe distance from existing electric supply lines.
- If this is not possible, the operator must initiate other safety measures in agreement with the owner or operating company of the supply lines (e.g. shutdown the power).
- If supply lines are exposed, they must be fastened, supported and secured accordingly.
- If live supply lines are touched nevertheless:
  - do not leave or touch the cab (Faraday cage).
  - If possible, drive the vehicle out of the danger zone.
  - Warn others against approaching and touching the vehicle.
  - Have the live wire de-energized.
  - Do not leave the vehicle until the supply lines that have been touched or damaged have been safely de-energized.

3.10.9 Working near non-electric supply lines

- Before performing any work, the operator must check whether there are any non-electrical supply lines in the designated work area.
- If non-electrical supply lines exist, the operator must initiate safety measures in agreement with the owner or operating company of the supply lines (e.g. shutdown the supply line).
- If supply lines are exposed, they must be fastened, supported and secured accordingly.

3.10.10 Behavior during thunderstorms

- Stop vehicle operation if a thunderstorm is gathering.
  - Stop the vehicle, secure and leave it, and avoid being near it.

3.10.11 Noise

- Observe the noise regulations (for example during applications in enclosed premises).
- Bear in mind external sources of noise (compressed-air hammer, concrete saw).
- Do not remove the sound baffles of the vehicle and attachment.
- Have damaged sound baffles immediately replaced (e.g. an insulating mat, muffler).
- Before starting work with the vehicle or attachment, find out about its noise level (e.g. label) - wear hearing protection.
- Do not wear ear protectors during vehicle travel on public roads or sites.

3.10.12 Cleaning

- Risk of injury from compressed air and high-pressure cleaners.
  - Wear appropriate protective equipment.
- Do not use any dangerous and aggressive detergents.
  - Wear appropriate protective equipment.
- Operate the vehicle only in a clean condition.
  - Keep climbing aids (handholds and footholds) free from dirt, snow and ice.
  - Keep the cab windscreens and visual aids clean.
  - Keep the headlights and work lights clean.
  - Keep the control elements and control lights clean.
  - Keep the safety and information labels clean, and replace damaged and missing labels by new ones.
- Perform cleaning work only if the engine is stopped and cooled down.
- Bear in mind sensitive components and protect them accordingly (e.g. electronic control units, relays).

4 Vehicle Description

4.1 Vehicle view

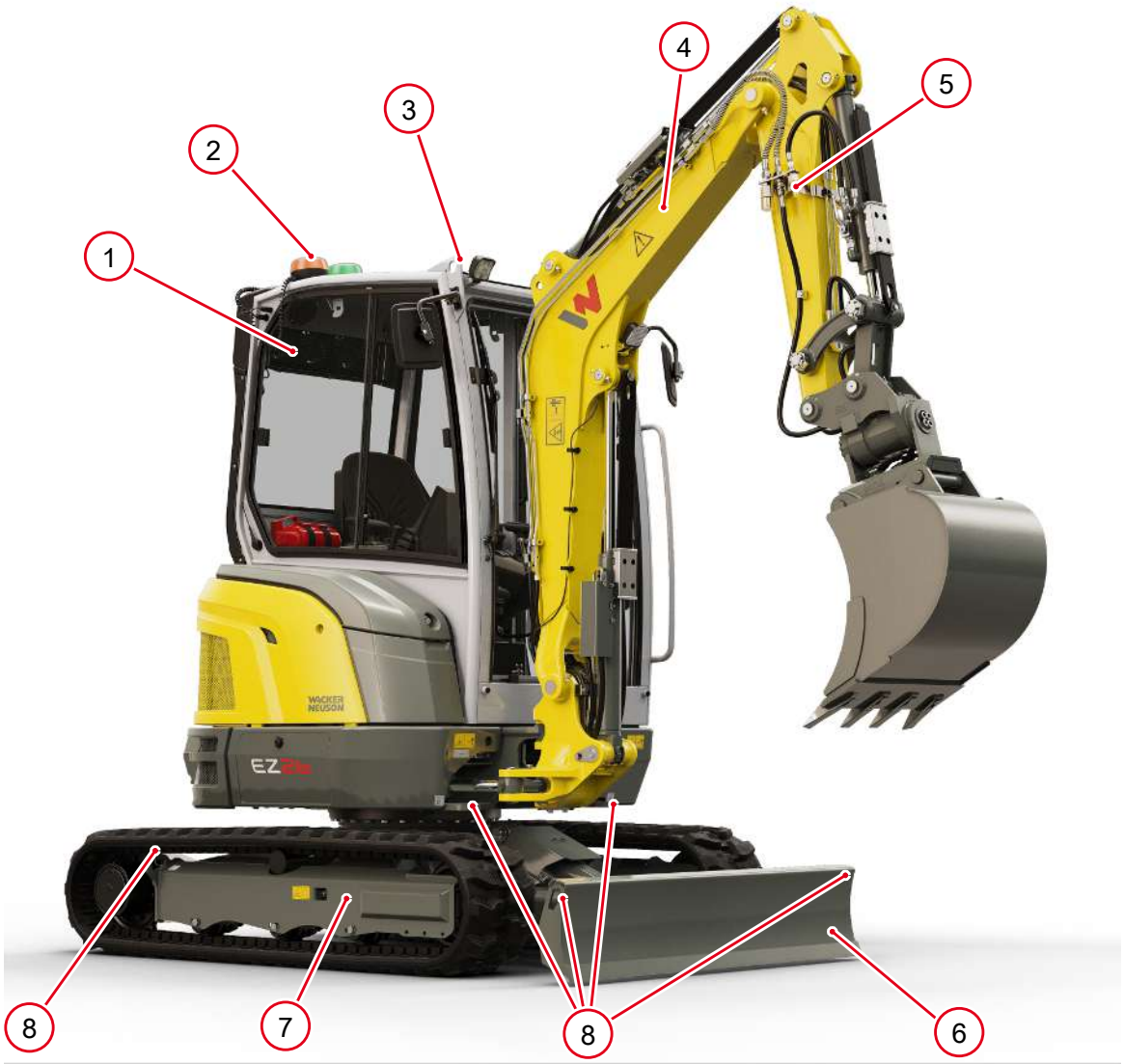

Fig. 6: Vehicle view cab

Item	Designation	Side
1	Cab	[} 39]
2	Rotating beacon	[} 105]
3	Lifting eyes	[} 154]
4	Boom system	[} 110]
5	Additional control circuits	[} 125]
6	Stabilizer blade	[} 113]
7	Under carriage	[} 97]

Item	Designation	Side
8	Tie-down points	[} 157]

4.2 Short description

Wacker Neuson excavators are powerful, highly flexible, efficient and environmentally friendly earth-moving machines. Their main area of application is loosening and moving earth, gravel and rubble.



Information

The vehicle can be equipped with the **Telematic** option for transmitting operating data, location, etc. via satellite.

4.2.1 Types and trade names

Vehicle type	Trade name	Engine
E24-01	EZ26	3TNV80F-NPWN

4.2.2 Protective structures

Protective structures are safety components that protect the operator from danger. These elements can be standard or retrofitted.

Safety component	Certificate	Availability
Canopy	TOPS	Series
	ROPS	Series
	FOPS (Level I)	Series
	Front Guard (Level I)	--
Cab	TOPS	Series
	ROPS	Series
	FOPS (Level I)	Series
	Front Guard (Level I)	Option

Responsibility for fitting protective structures

The decision as to whether and which protective structures (type or level I or II) are necessary must be made by the vehicle operator and depends on the respective work situation.

The vehicle operator must comply with national and regional regulations and inform the operator which protective structures must be used in the respective work situation.

The vehicle operator must ensure that only work that does not require a higher level of protection may be carried out.

4.2.3 Definition of FOPS/front guard level

4.2.3.1 Level I

Penetration resistance to protect against falling (FOPS) or frontal penetration in the cab (Front Guard) of small objects (e.g. bricks, small pieces of concrete, hand tools) for vehicles used, for example, in road maintenance, landscaping and other construction site work.

4.2.3.2 Level II

Penetration resistance to protect against heavy objects (e.g. trees, rocks) falling (FOPS) or entering the cab from the front (Front Guard) for vehicles used e.g. for clearing, demolition and forestry work.

4.2.4 Upper carriage variants

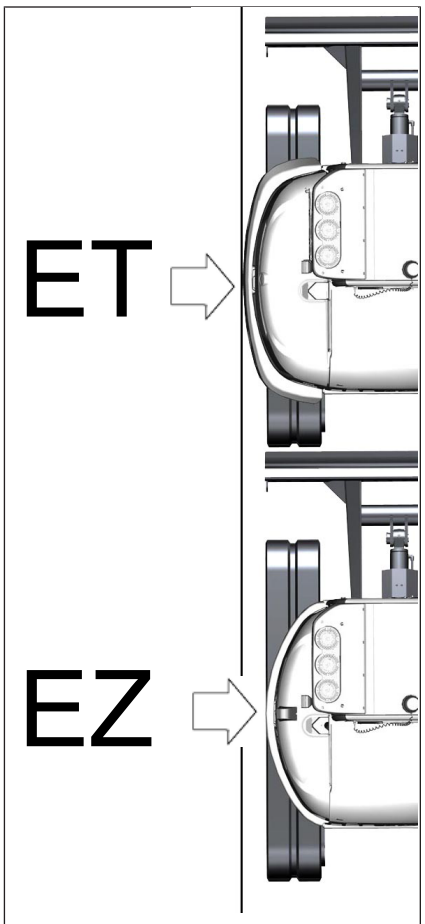

Fig. 7: Upper carriage variants

ET: Conventional upper carriage

EZ: Zero tail upper carriage; the upper carriage **without additional weight** does not protrude beyond the width of the vehicle when turning.

4.3 Control elements at the operator station

Vehicle with cab

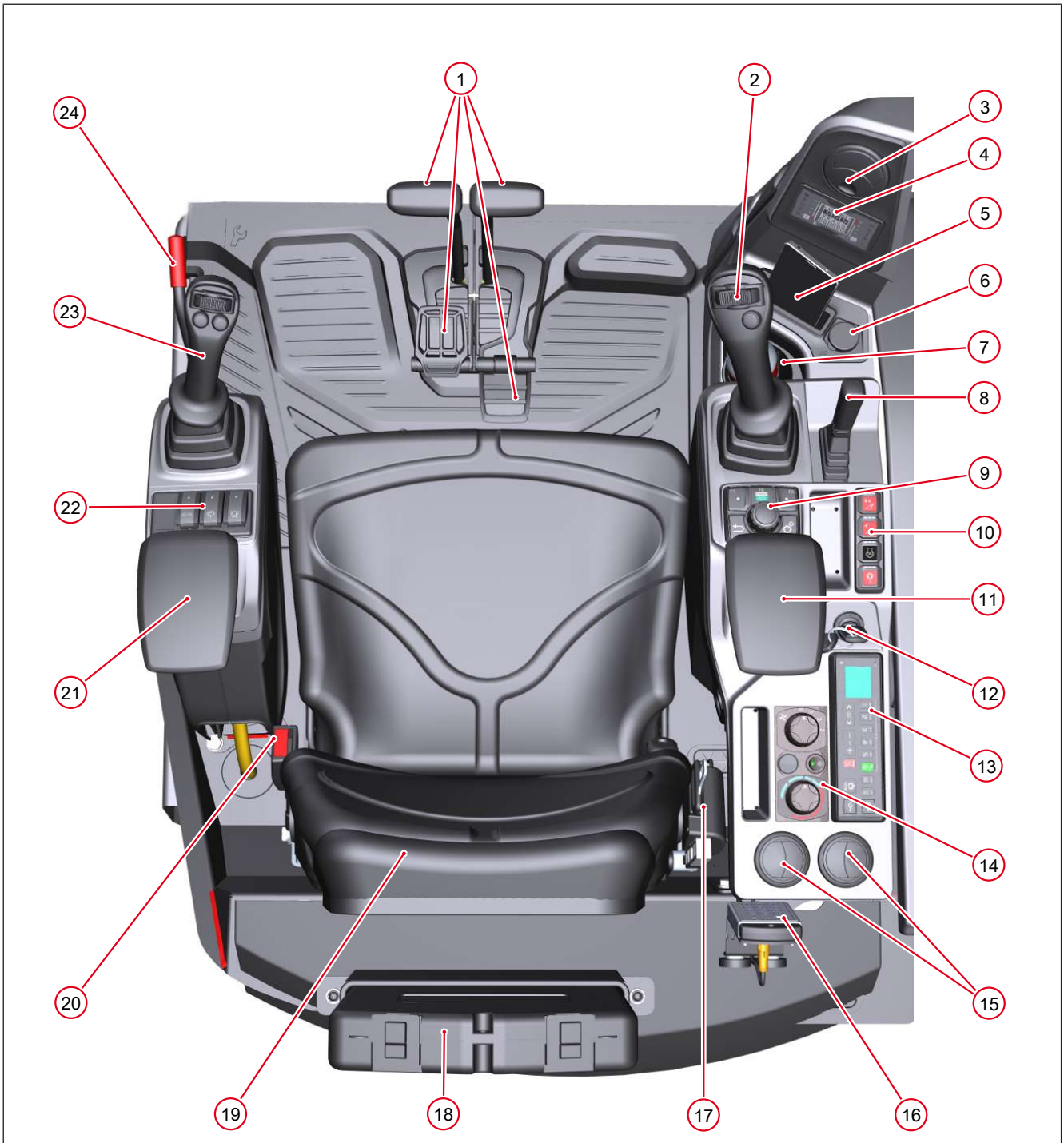

Fig. 8: Operator station

Item	Designation	Side
1	Drive lever	[⟩ 99] [⟩ 97]
2	Joystick right	[⟩ 110]
3	Ventilation nozzle	--
4	Display	[⟩ 81]

Item	Designation	Side
5	Cell phone pocket	--
6	USB connection	[} 213]
7	Cup holder	--
8	Stabilizer blade lever	[} 100] [} 113]
9	Jog dial	[} 42]
10	Keypad	[} 41]
11	Armrest right	[} 69]
12	Starter	[} 88]
13	Radio (see radio operator's manual)	--
14	Temperature control/air conditioning system	[} 109]
15	Ventilation nozzles	--
16	Drive interlock	[} 96]
17	Seat belt	[} 70]
18	Document box	[} 6]
19	Seat	[} 67]
20	Seat belt buckle	[} 70]
21	Left armrest	[} 69]
22	Switch panel	[} 41]
23	Joystick left	[} 110]
24	Joystick base	[} 86]

4.3.1 Control elements

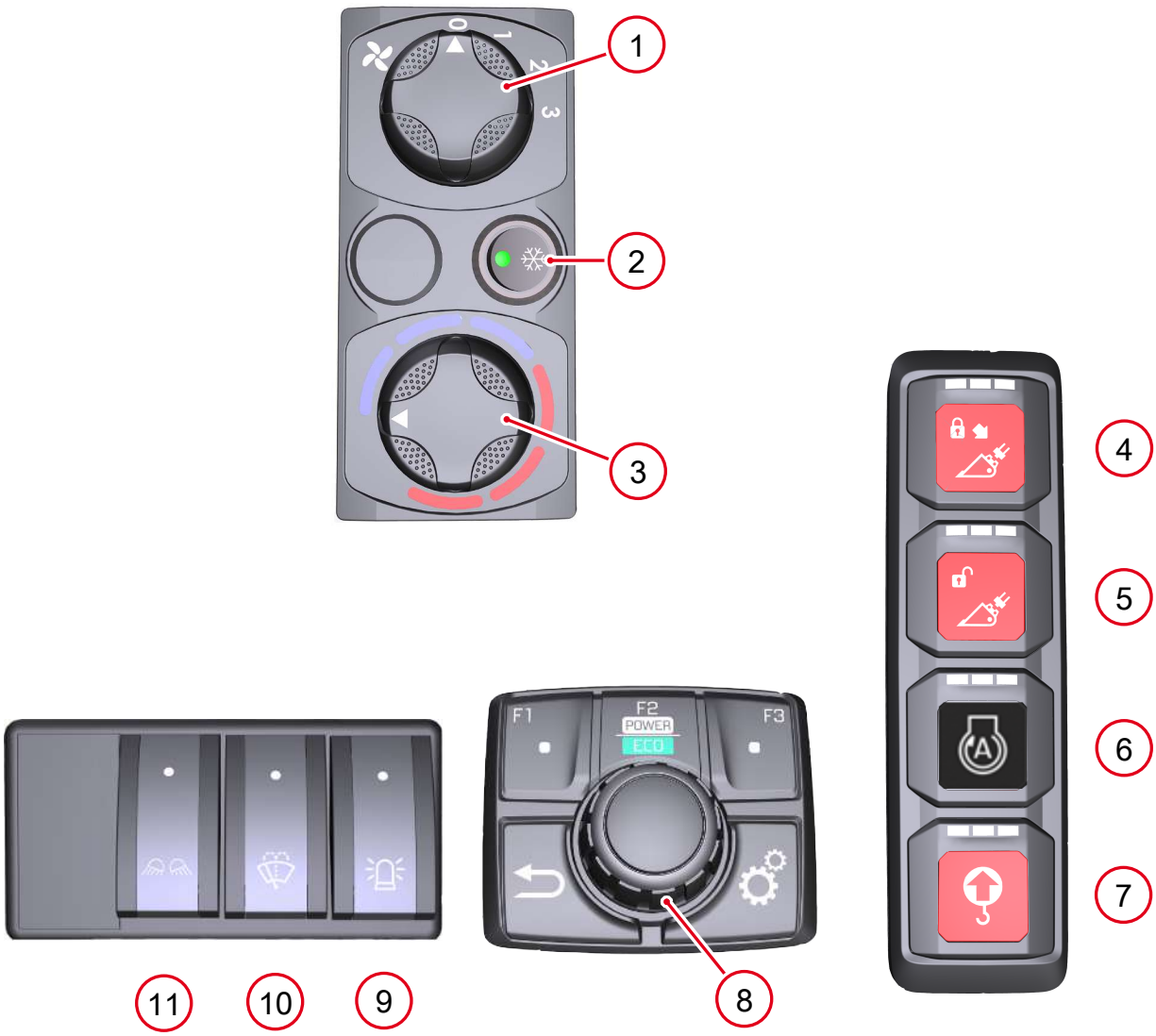

Fig. 9: Control elements

Item	Designation	Side
1	Ventilation	[} 109]
2	Air conditioning system	[} 109]
3	Temperature control	[} 109]
4	Activate/close quick hitch	[} 133]
5	Open quick hitch	[} 133]
6	Auto stop	[} 90]
7	Safe load indicator	[} 115]
8	Jog dial	[} 42]
9	Rotating beacon	[} 105]
10	Washer system	[} 108]
11	Work light	[} 104]

4.3.2 Jog dial



Fig. 10: Jog dial

Symbol	Control element	Function	Side
	F1	Display operating states	[} 81]
	F2	Change engine operating mode	[} 98]
	F3	Automatic speed control	[} 98]
	Not assigned	--	--
	Not assigned	--	--
	Controller	Set the speed (turn) Set the oil flow (turn) Return (press)	[} 98] [} 147]

Status displays

Function	Button
Change view	Press F1 briefly
Reset daily operating hours	Press F1 longer

4.4 Type plates and labels

⚠ WARNING

Risk of injury due to missing or damaged labels!

Inadequate warning of hazards can lead to accidents with serious injuries or death.

- ► Do not operate the vehicle with missing or damaged decals.
- ► Replace missing or damaged decals immediately.

Information

The labels may differ in design, number and arrangement from the illustration in these operator's manual. Differences may result, for example, from the country of destination, the engine and legal requirements.

4.4.1 Type labels

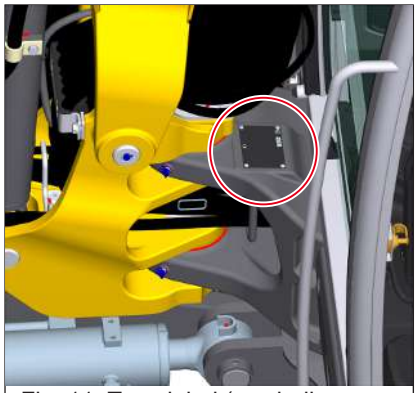

Fig. 11: Type label (symbolic representation)

Vehicle type label

The type label with the serial number is located at the marked position.

The vehicle serial number is also located on the vehicle frame.

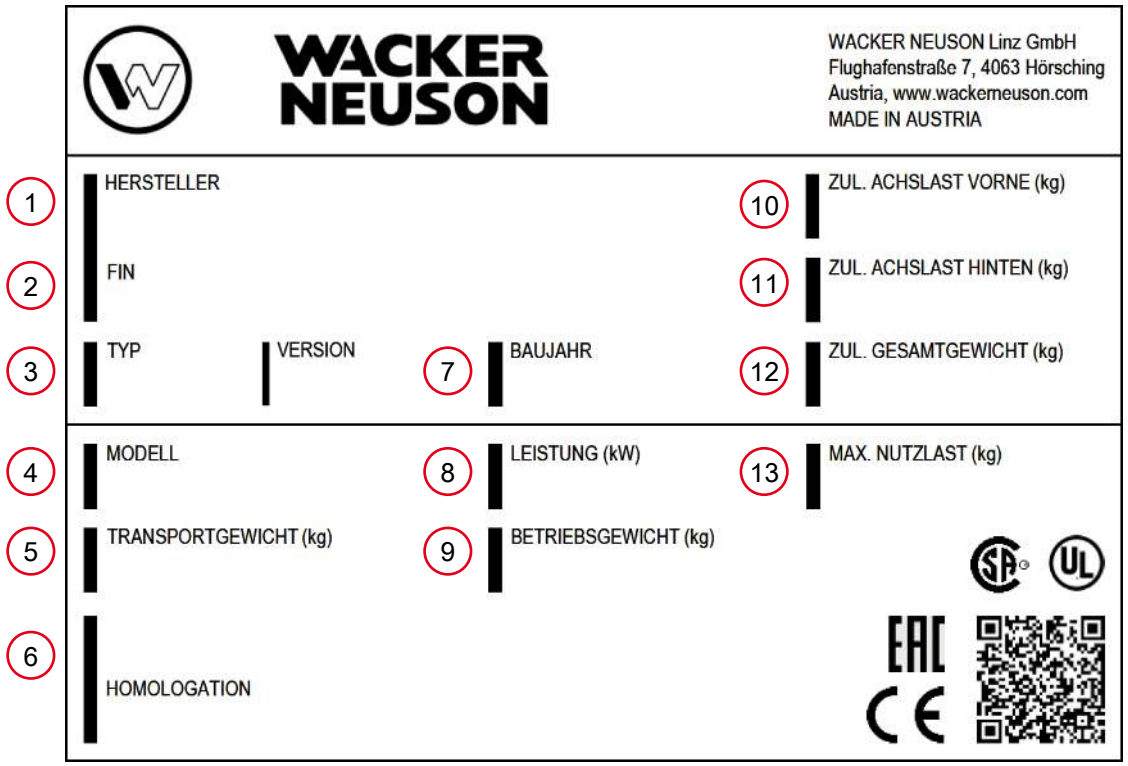

Fig. 12: Vehicle type label

Position	Description
1	Manufacturer
2	Vehicle serial number
3	Internal type designation and version
4	Trade name
5	Transport weight
6	Homologation
7	Year of construction
8	Power
9	Operating weight
10	Permissible axle load front
11	Permissible axle load rear
12	Permissible total weight
13	Maximum payload

Information

For better legibility, the type label is depicted in a bright color. The language on the type label may differ.

17-Digit serial number

The 17-digit serial number contains additional information to facilitate vehicle identification.

Manufacturer code	Vehicle type	Internal type designation	Check letter	Serial number
WNC (Austria) WNP (China)	**E** (Excavator)	1301	K	00012345
	D (Dumper)			
	A (Aggregate)			

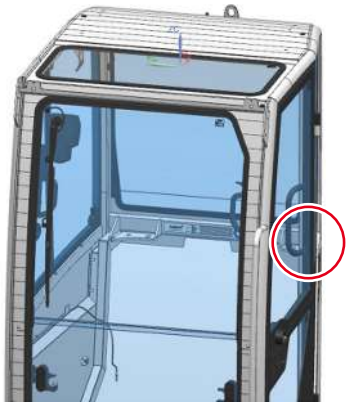

Fig. 13: Type label cab

Type label cab

The type label is located in the marked place.

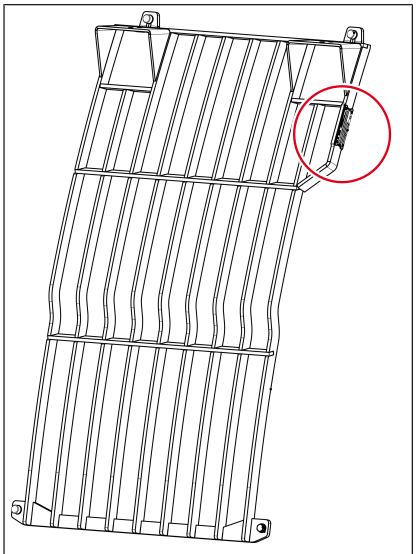

Fig. 14: Type label of front guard (symbol representation)

Type label Front Guard

The type label is located in the marked place

4.4.2 Safety labels

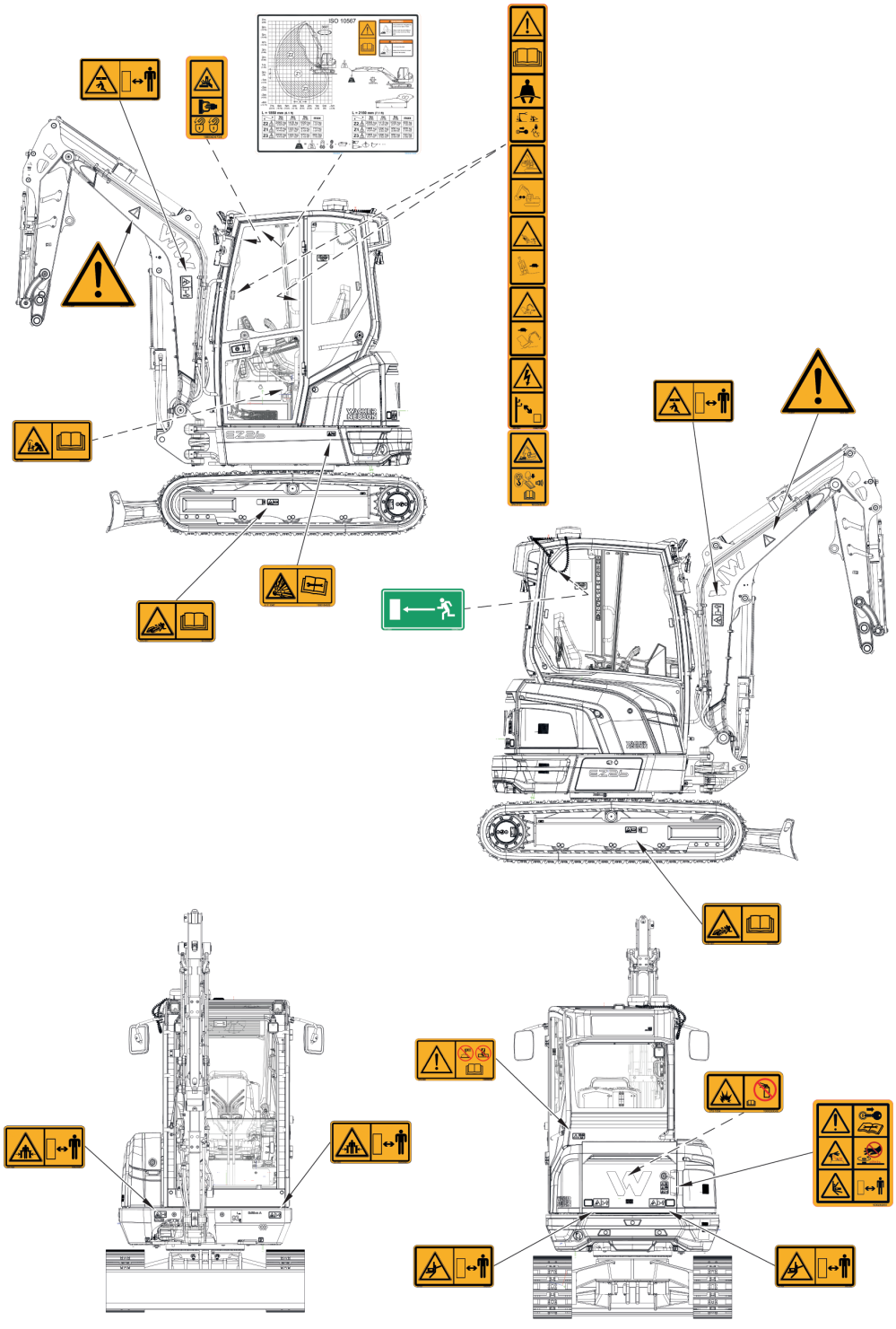

Fig. 15: Overview of security labels



Fig. 16: Crushing hazard lifted load

Meaning

Crushing hazard

No one may stand under a lifted load or in the danger zone.

Position

On the left and right of the boom

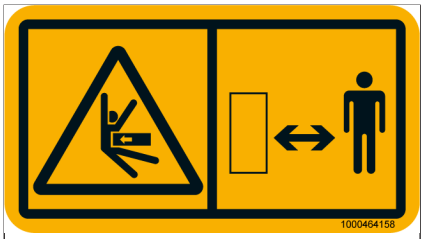

Fig. 17: Crushing hazard in the danger zone

Meaning

Crushing hazard

No one may stay in the danger zone of the vehicle.

Position

On the vehicle rear left and right

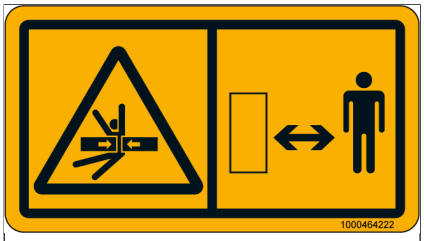

Fig. 18: Crushing hazard in the danger zone

Meaning

Crushing hazard

No one may stay in the danger zone of the vehicle.

Position

On the undercarriage front left and right



Fig. 19: Crushing hazard windshield

Meaning

Crushing hazard

1. Open and close the windshield using the handles only.
2. Engage window.

Position

On the windshield

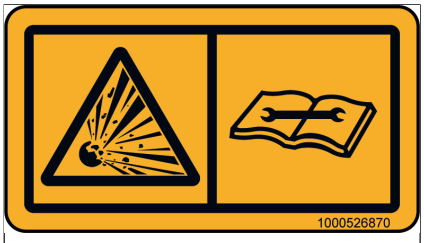

Fig. 20: Pressure accumulators

Meaning

Explosion hazard due to high pressure.
Have the pressure accumulator serviced or repaired only by an authorized service center.

Position

On chassis left



Fig. 21: Emergency exit

Meaning

Emergency exit with **Front Guard**option

Position

On the rear window inside



Fig. 22: Track tensioner

Meaning

Risk of injury due to grease leakage under pressure.

Read the operator’s manual before working on the track tensioner.

Position

On the undercarriage left and right

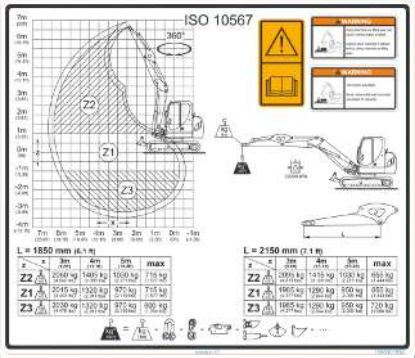

Fig. 23: Load capacity indicator label (symbol display)

Meaning

Load capacity sticker

Position

At the headliner



Fig. 24: Vehicle operation

Meaning

Read the operator's manual before putting the vehicle into operation.
Fasten the seat belt.
Lower the boom system and dozer blade to the ground.
Remove the starting key and store it in a safe place.
Fold up the joystick base.

Risk of crushing
Possible vehicle damage.
Maintain the distance to the cab.

Risk of crushing
Possible vehicle damage.
Observe the operating limits of the vehicle.
Only drive in speed range 1.

Danger to life from electric shock
Keep the vehicle at a sufficient distance from overhead power lines.

Position

On the left A-pillar (canopy)

On the left B-pillar (cab)



Fig. 25: Safe load indicator

Meaning

Switch on the overload indicator before lifting gear applications.

A tipping vehicle can cause serious injury or death.

Possible vehicle damage

Read the operator's manual.

Position

On the left A-pillar (canopy)

On the left B-pillar (cab)


Fig. 26: Danger of crushing and hot surfaces

Meaning

Danger of crushing and hot surfaces

Position

On the boom system left and right



Fig. 27: Explosion hazard Battery

Meaning

Explosion hazard due to improper starting aid

Position

On the fuse box



Fig. 28: Engine hood

Meaning

Read the operator's manual before putting the vehicle into operation.

Remove the starting key and store it in a safe place.

Risk of injury from rotating parts

- Only open the engine hood when the engine is switched off.

Burning hazard from hot surfaces

- Let the engine cool down.

Scalding hazard from hot liquids

Risk of injury due to fluid leakage under pressure

- Let the engine cool down.
- Release hydraulic system pressure, then carefully open the closures.

Position

On the engine hood

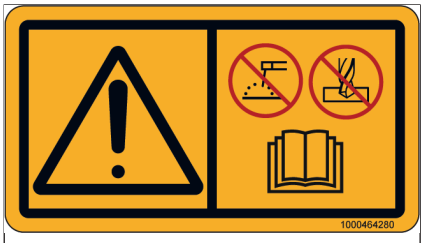

Fig. 29: TOPS

Meaning

Modifications to the structure (e.g. drilling) and improper repairs will reduce the protective effect of the roll bar, canopy or cab and can cause serious injury or death.

Position

On the rear cabin/canopy.



Fig. 30: Air intake (jump start)

Meaning

Do not use any starting aid sprays.

Position

In the engine compartment

4.4.3 Information labels

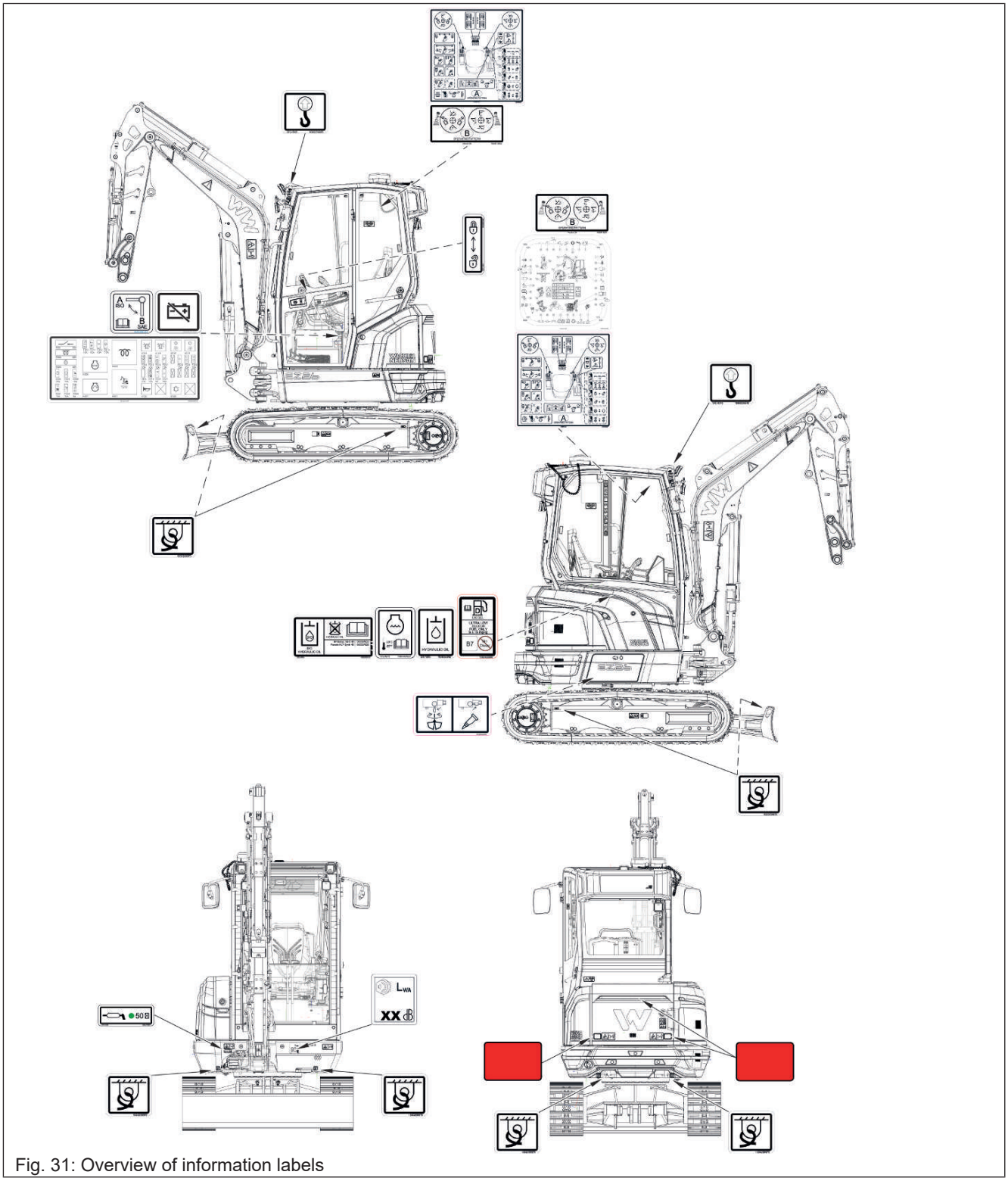

Fig. 31: Overview of information labels



Fig. 32: Hydraulic oil

Meaning

Hydraulic oil

Position

Near the hydraulic oil tank fill opening

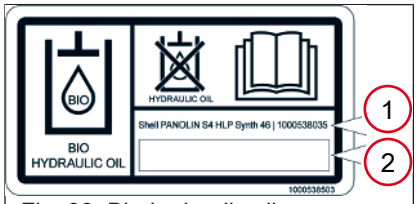

Fig. 33: Bio-hydraulic oil

Meaning

Bio-hydraulic oil

Depending on the bio-hydraulic oil used, the triangle is cut out on the side.

1. Panolin HLP Synth 46
2. Other bio-hydraulic oil

Position

Near the hydraulic oil tank fill opening

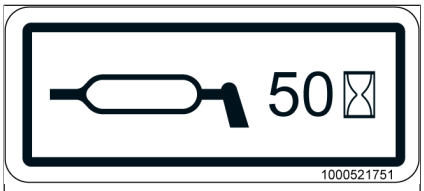

Fig. 34: Lubricating interval

Meaning

Lubricating interval

Position

On chassis right front

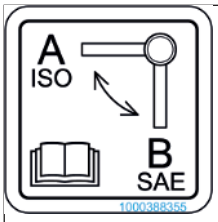

Fig. 35: Circuit diagram A/B

Meaning

Check the set control mode before start of work

Position

Under the seat console

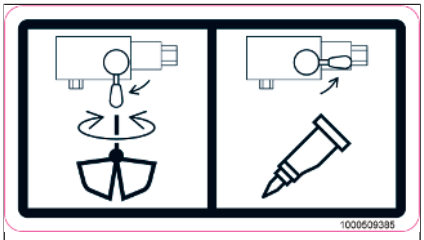

Fig. 36: Excavator operation/hammer operation

Meaning

Select excavator or hammer operation

Position

On the changeover valve

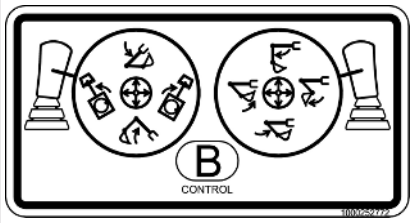

Fig. 37: SAE functions joysticks

Meaning

Joystick operation at the SAE controller.

Position

On the headliner (canopy)

On the left side window (cabin)

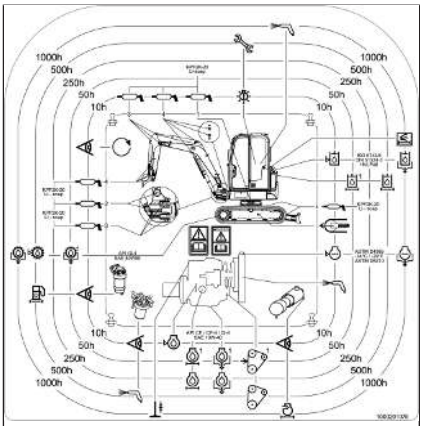

Fig. 38: Maintenance label (symbolic representation)

Meaning

Maintenance label

Position

At the headliner



Fig. 39: Battery master switch

Meaning

Battery master switch

Position

At the battery disconnector

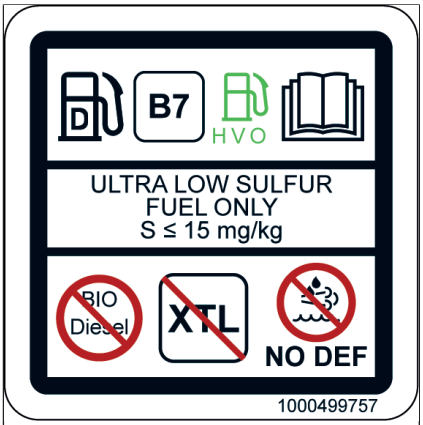

Fig. 40: Diesel/HVO

Meaning

Permitted fuels:

Diesel B7 with less than 15 mg/kg sulfur

HVO

Prohibited fuels:

Biodiesel

XTL

Do not fill urea solution.

Position

At the fuel tank

NOTICE

Damage to the fuel system due to an incorrect fuel.

► Fill only HVO if the label with the HVO symbol is affixed on the vehicle. Contact an authorized service center in case of any doubt.

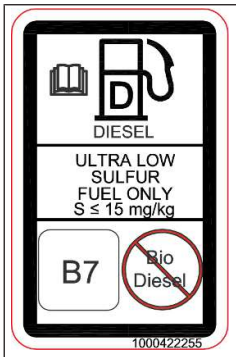

Fig. 41: Diesel

Meaning

Permitted fuels:

Diesel B7 with less than 15 mg/kg sulfur

Prohibited fuels:

Biodiesel

Do not fill urea solution.

Position

At the fuel tank filler opening



Fig. 42: Sound power level (symbolic representation)

Meaning

L_{WA}: Sound power level generated by the vehicle
The sound power level depends on the vehicle.

Position

On the chassis front left

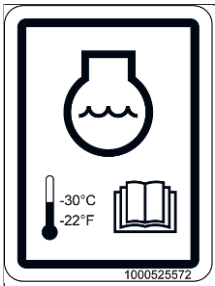

Fig. 43: Coolant

Meaning

Coolant temperature range

Position

At the coolant filler opening

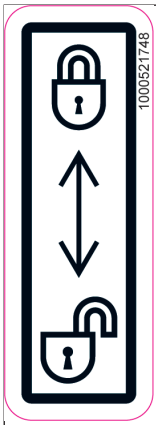

Fig. 44: Hydraulic functions active or blocked

Meaning

Hydraulic functions active or blocked

Position

On the joystick base

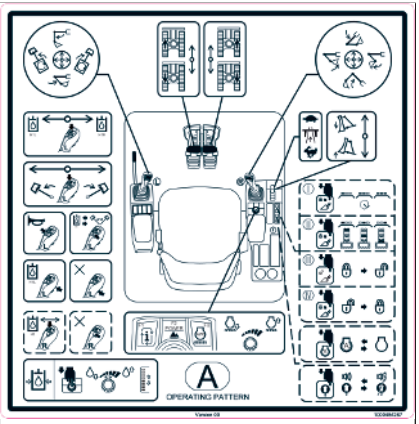

Fig. 45: Function overview ISO

Meaning

Function overview ISO control

Before starting the vehicle, check the set control.

Position

On the headliner (canopy)

On the left side window (cabin)



Fig. 46: Lifting eye

Meaning

Lifting eye

Position

At the lifting eyes



Fig. 47: Lashing point

Meaning

Lashing point

Position

At the lashing points

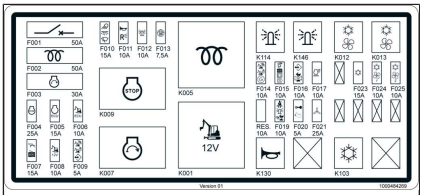

Fig. 48: Label for fuses (symbol representation)

Meaning

Fuses and relays

Position

On the fuse box



Fig. 49: Reflector (symbolic representation)

Meaning

Reflectors

Position

On the vehicle rear left and right

4.4.4 ANSI label

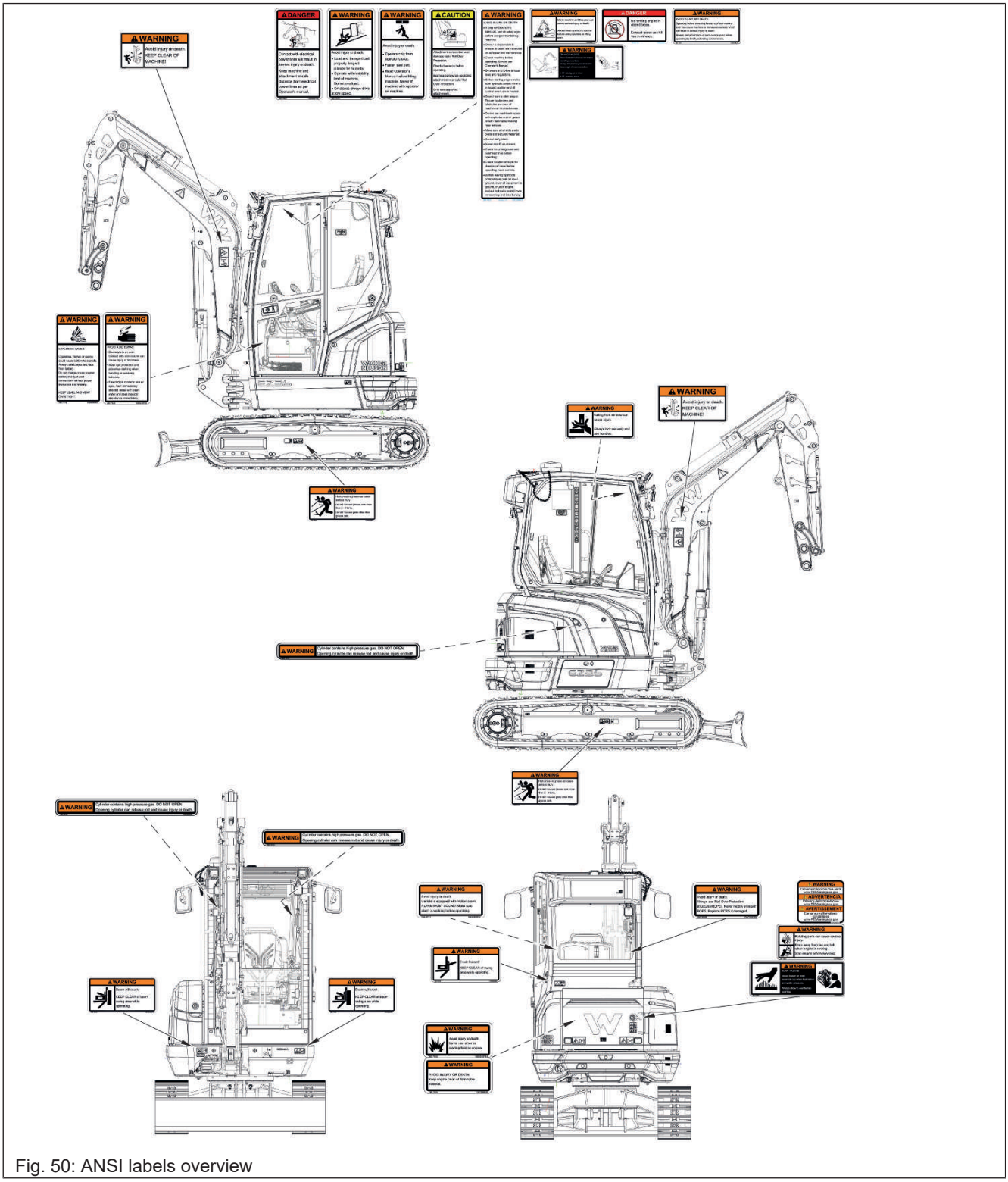

Fig. 50: ANSI labels overview

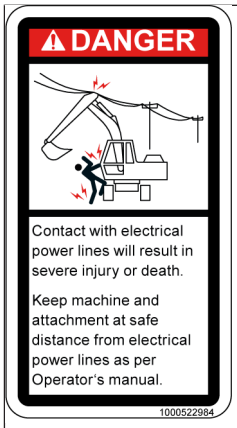

Fig. 51: Electrical lines

Position

At the headliner

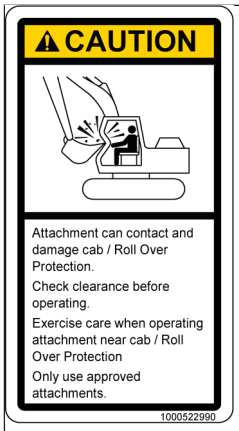

Fig. 52: Attachments/Safe operation

Position

At the headliner



Fig. 53: Lifting gear applications

Position

At the headliner



Fig. 54: Operation

Position

At the headliner

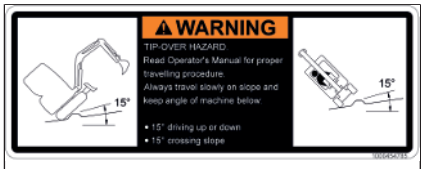

Fig. 55: Slope drive

Position

At the headliner



Fig. 56: ROPS

Position

On the cross brace rear left (canopy)

On the rear window inside left (cabin)



Fig. 57: Boom/Danger zone

Position

On the boom system left and right



Fig. 58: Track tensioner

Position

On the undercarriage left and right



Fig. 59: Windshield

Position

On the windshield

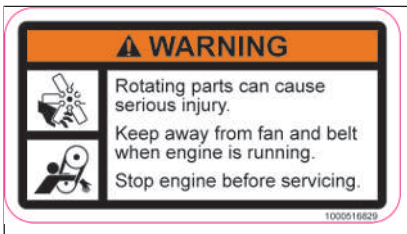

Fig. 60: Rotating parts

Position

On the engine hood

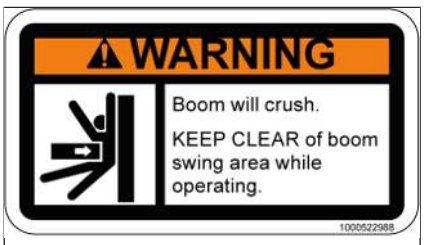

Fig. 61: Articulation area

Position

On the undercarriage front left and right

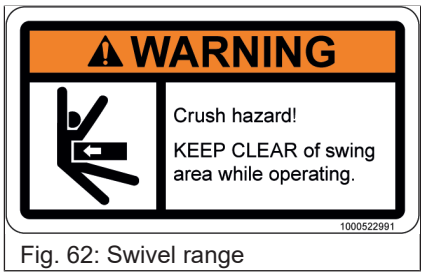

Fig. 62: Swivel range

Position

On the cab rear

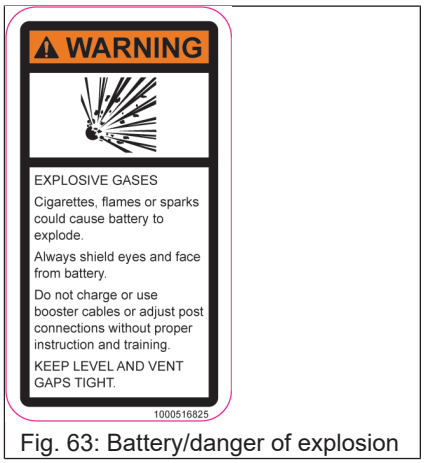

Fig. 63: Battery/danger of explosion

Position

On the fuse box



Fig. 64: Battery/acid

Position

On the fuse box

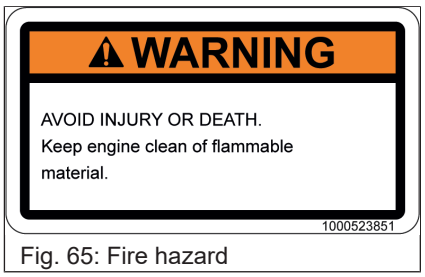

Fig. 65: Fire hazard

Position

In the engine compartment



Fig. 66: P65

Position

On the engine hood



Fig. 67: Gas spring

Position

On the gas springs



Fig. 68: Tank

Position

On the engine hood



Fig. 69: Tipping hazard

Position

At the headliner

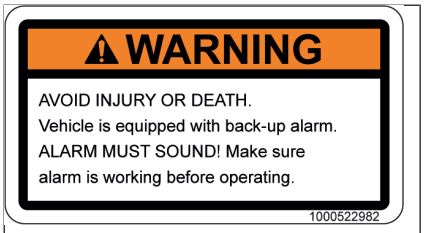

Fig. 70: Travel signal

Position

On the cross brace rear right (canopy)

On the rear window inside right (cabin)



Fig. 71: Operation

Position

At the headliner

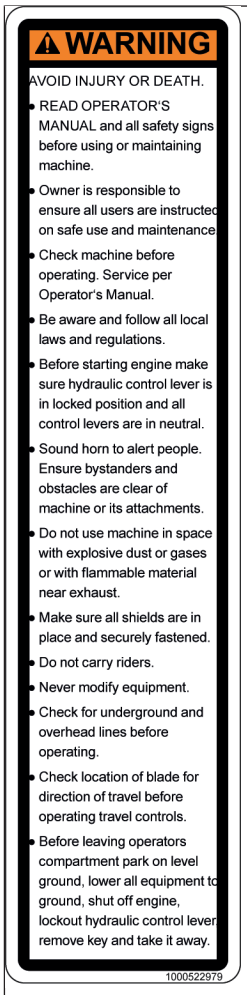

Fig. 72: Operation

Position

At the headliner



Fig. 73: Jump starter spray

Position

In the engine compartment



Fig. 74: Exhaust gases

Position

At the headliner

5 Putting into operation

5.1 Entry and exit



⚠ CAUTION

Risk of injury during entry and exit!

Improper entry and exit can lead to injuries.

- ► Only use the prescribed steps and handles to enter and exit.
- ► Steps and handles must be clean and functional.
- ► Have damaged steps and handles replaced. Do not operate the vehicle.
- ► Two hands and one foot must always be in contact with the vehicle for entry and exit.
- ► Enter and exit facing the vehicle.



⚠ CAUTION

Crushing hazard due to unlocked cab doors!

Unlocked cab doors can cause crushing.

- ► The door must be locked in place on the parking brake before climbing up and down.
- ► Use the prescribed handles for closing.



Information

Stop the engine before leaving the vehicle.

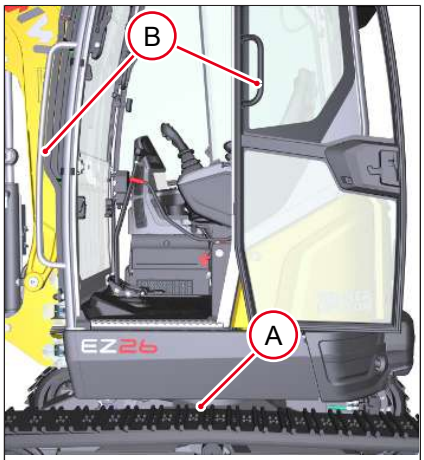

Fig. 75: Entry and exit cab

Only use the prescribed steps**A** and handles**B** to enter and exit.

5.1.1 Unlocking and locking the door

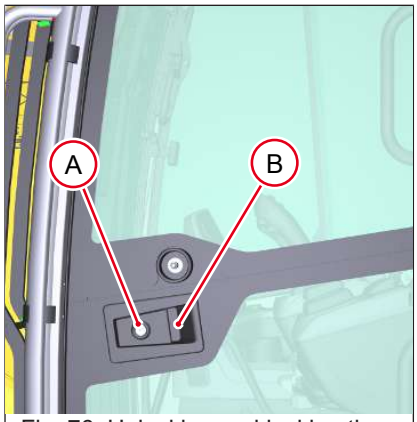

Fig. 76: Unlocking and locking the door

Unlocking

Unlock lock with key **A**.

Locking

Lock lock with key **A**.

5.1.2 Opening and closing the door

Open

Pull door handle **B**.

Close

Close the door.

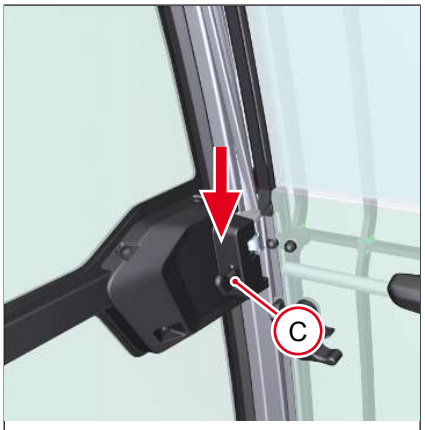

Fig. 77: Opening the door from the inside

Open the door from the inside

Push down lever**C** on the door lock.

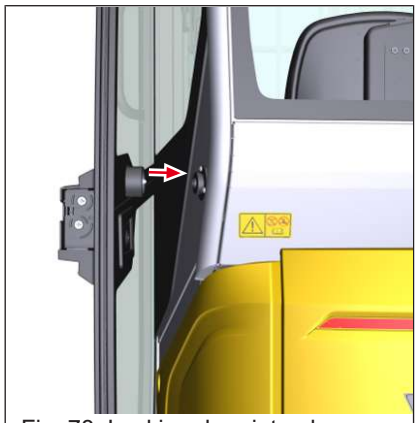

Fig. 78: Locking door into place

Locking door into place

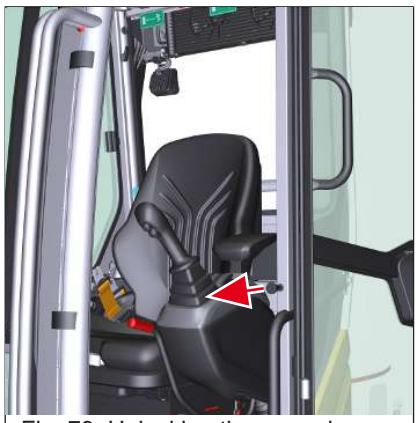

Fig. 79: Unlocking the open door

Unlocking the door

Pull the button.

5.1.3 Emergency exit

⚠ WARNING

Risk of injury during emergency exit!

An emergency exit can lead to serious injury or death.

► The vehicle only has steps and handles on one side for safe exit.

There are several options for the emergency exit:

- Type label front guard: Front window or right window
- Front guard mounted: Rear window or right window

5.1.4 Emergency exit at front guard

⚠ WARNING

Risk of injury during emergency exit!

An emergency exit can lead to serious injury or death.

► The vehicle has no steps or handholds on the right or rear for safe exit.

► When breaking a window, protect your eyes and face from flying glass splinters.

► Watch out for glass splinters during an emergency exit.

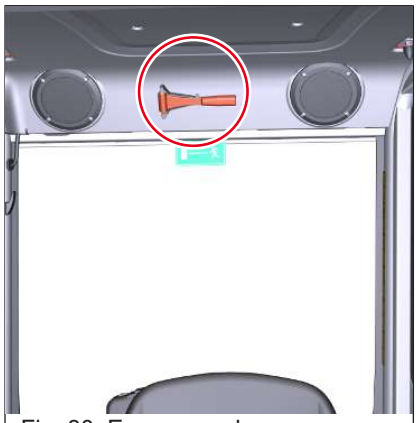

Fig. 80: Emergency hammer

Break in the rear or side window with the emergency hammer.

5.2 Setting up the operator station

5.2.1 Seat

⚠ WARNING

Accident hazard by adjusting the seat during operation!

Adjusting the seat during operation can lead to serious injury or death.

► Adjust the seat before starting the engine.

► Ensure that the seat is locked in place.

Information

All controls must be easily accessible and can be moved to their final position.

The seat offers the following adjustment options:

- Weight
- Length
- Backrest
- Armrests

5.2.1.1 Weight



Fig. 81: Set weight

1. Sit down on the seat.
2. Fold out the lever completely.
3. Operate the lever up or down until the arrow is in the center of the display.

5.2.1.2 Length



Fig. 82: Adjust the length

1. Sit down on the seat.
2. Operate the lever and lock the seat in the desired position.



Fig. 83: Adjust the length

5.2.1.3 Backrest



Fig. 84: Adjust the backrest

1. Sit down on the seat.
2. Operate the lever and adjust the backrest.



Fig. 85: Adjust the backrest

5.2.1.4 Armrests



Fig. 86: Adjusting the armrest

1. Hold the armrest and pull out button.
2. Adjust armrest and release button.

5.2.1.5 Seat belt



⚠ WARNING

Risk of injury as a result of not wearing a seat belt or fastening it incorrectly!

Not wearing a seat belt or fastening it incorrectly can lead to serious injury or death.

- ► Fasten the seat belt firmly over the pelvis before starting the engine.
- ► Do not unfasten the seat belt while the engine is running. This also applies when stopping work.
- ► Do not twist the seat belt or wear it over hard, sharp or fragile objects in clothing.
- ► Make sure that the seat belt buckle is engaged.
- ► Do not use belt extensions or buckle adapters.



⚠ WARNING

Risk of injury due to a damaged or soiled seat belt!

A damaged or soiled seat belt can lead to serious injury or death.

- ► Keep the belt and belt buckle clean and check for damage.
- ► Have the belt replaced immediately after an accident by an authorized service center. Have anchoring points and seat attachment checked.
- ► Have the belt and belt buckle replaced immediately by an authorized service center in the event of damage.

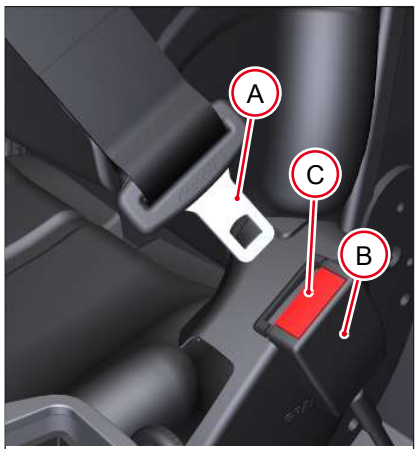

Fig. 87: Seat belt (symbolic representation)

Fasten seat belt

1. Sit down on the seat.
2. Engage lock tongue **A** in buckle **B**.

Unfasten seat belt

- Press button **C**.

5.2.2 Opening and closing windows



⚠ CAUTION

Risk of injury when opening and closing the front window!

Risk of injury when opening and closing the front window.

- ► Use both handles.
- ► Pull in head.
- ► Engage both latches.
- ► Keep window guides free.

5.2.2.1 Opening and closing the upper front window



Fig. 88: Opening the upper front window

Opening the upper front window

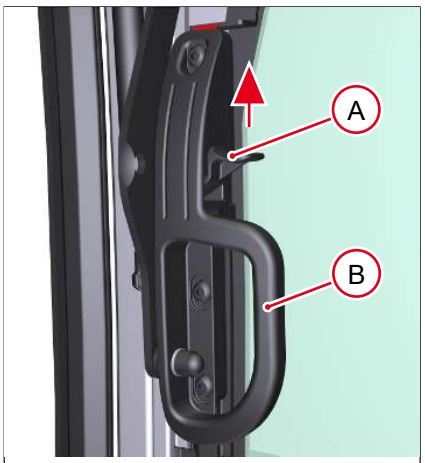

Fig. 89: Opening the upper front window

1. Keep levers **A** pressed on the left and right and pull the front window forward by the handles **B** on the left and right.
2. Release the levers **A** and push the window upwards and engage it.

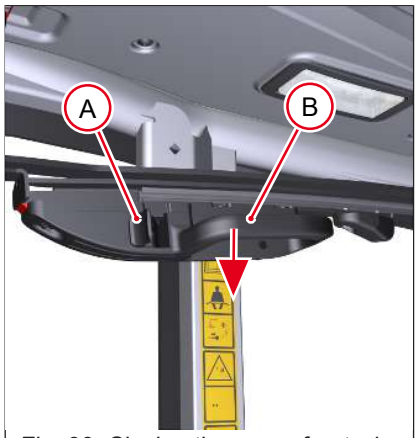

Fig. 90: Closing the upper front window

Closing the upper front window

1. Press the levers **A** on the left and right and pull the front window down by the handles **B** on the left and right.
2. Push the front window completely forward and release lever **A**.

5.2.2.2 Opening and closing the lower front window


Fig. 91: Opening the lower front window

Opening the lower front window

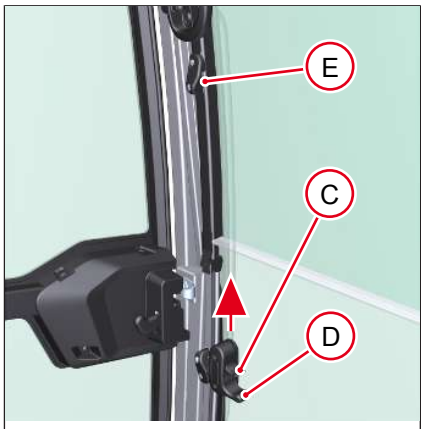

Fig. 92: Opening the lower front window

Press the levers **C** left and right and pull the front window upwards by the handles **D** left and right and engage in the guide **E**.

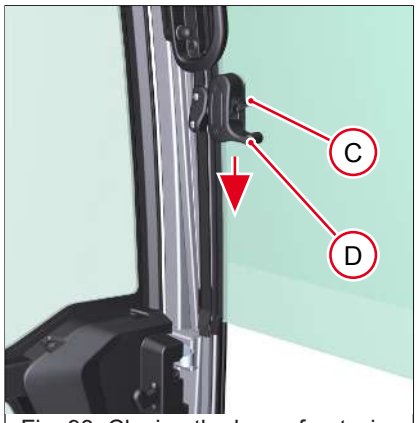

Fig. 93: Closing the lower front window

Closing the lower front window

Keep levers **C** pressed on the left and right and pull the lower window down by the handles **D** on the left and right and engage the front window.

5.2.2.3 Opening and closing the entire front window


Fig. 94: Opening/closing the entire front window

Opening the entire front window

1. Open the lower front window.
2. Open and latch both the windows together.

Closing the entire front window

1. Close both the windows together.
2. Close the lower front window.

5.2.2.4 Tilting the front window


Fig. 95: Tilting the front window

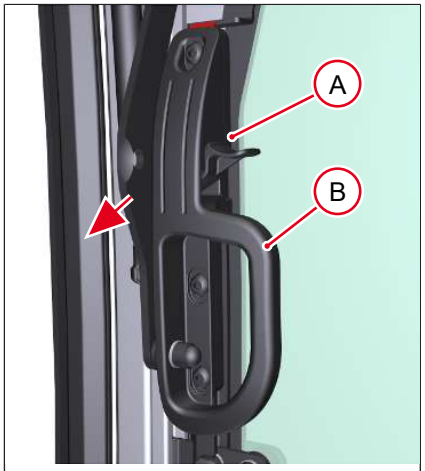

Fig. 96: Tilting the front window

1. Press the levers **A** on the left and right and slightly pull by the handles **B** on the left and right.
   ⇨ The front window is unlocked.
2. Release lever **A** and pull at the handles **B** left and right until the window engages.

5.2.2.5 Opening and closing side windows

The right side windows can be opened.

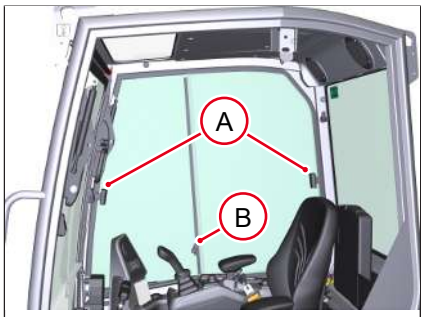

Fig. 97: Opening the side window

Open

Actuate handle **A**, open side window and lock with screw **B**.

Close

Loosen screw **B**, activate handle **A** and close side window.

5.2.3 Visual aids



⚠ WARNING

Risk of injury to persons in the danger zone!

When reversing, persons in the danger zone may be overlooked and accidents with serious injuries or death may occur.

- ► Adjust visual aids correctly.
- ► Stop work if persons enter the danger zone.
- ► Observe position changes and movements of mounted attachments and persons.



⚠ WARNING

Accident hazard due to a restricted field of vision in the work area!

The restricted field of vision can lead to accidents with serious injuries or death.

- ► No one may be in the danger zone.
- ► If necessary, use suitable visual aids.
- ► Attachments must not improperly restrict the field of vision.



⚠ WARNING

Accident hazard due to incorrectly adjusted visual aids!

Incorrectly adjusted visual aids can lead to serious injuries or death.

- ► Before starting work, always ensure that the visual aids are functional and correctly adjusted.
- ► Have contaminated hydraulic oil filters replaced immediately by an authorized service center.
- ► If no image appears on the camera monitor, stop vehicle operation. Do not operate the vehicle and contact an authorized specialist workshop.
- ► Observe national and regional regulations.



⚠ WARNING

Risk of injury when adjusting visual aids

Can result in serious injury or death.

- ► Safe access aids or working platforms must be used for adjustment work if the components cannot be reached from the ground.
- ► Adjust the rear-view mirrors from the cab.
- ► Do not use vehicle parts or attachments as a climbing aid.



Information

Curved mirrors enlarge, reduce or distort the field of vision.



Information

Wacker Neuson recommends adjusting the mirrors with the help of a second person.

- Do not use vehicle parts or attachments as climbing aids.

5.2.3.1 Exterior mirror

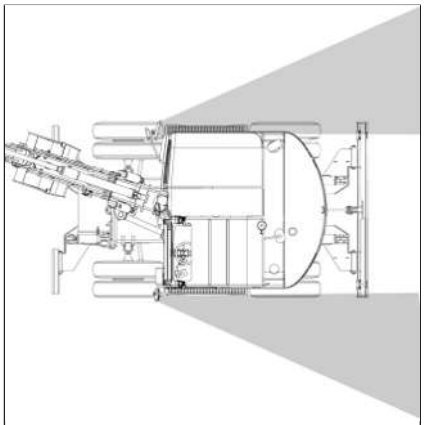

Fig. 98: Exterior mirror cabin (symbolic representation)

- The driving and work area must be visible from the seat.
- The field of vision must extend as far back as possible.
- The vehicle's left and right rear edges must be visible in the exterior mirrors.

5.2.4 Protective structures



⚠ WARNING

Risk of injury from modified protective structures!

A modification weakens the structure and can lead to serious injury or death.

- ► Do not modify protective structures (e.g. drilling, welding, cutting).
- ► Do not retrofit components that have to be mounted on a protective structure.
- ► Have a damaged protective structure replaced.
- ► In case of doubt, contact an authorized service center.
- ► Only an authorized service center may repair a protective structure.
- ► Do not reuse self-locking fasteners.



NOTICE

Damage caused by improper installation of protective structures.

- ► The initial assembly of protective structures must be carried out by an authorized specialist workshop.



Information

The vehicle may only be operated with functional and properly installed protective structures (rollbar/canopy/cab). Only use protective structures approved by Wacker Neuson for additional protection.

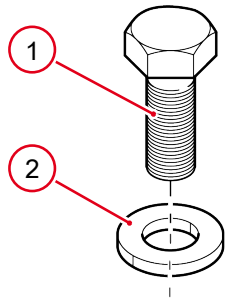

Fig. 99: Screw (symbolic representation)

The term **screw** is used as a substitute for the following fastening aids:

1. Screw
2. Washer

Information

Mount protective structures only with a crane.

5.2.4.1 Front Guard Level I

⚠ WARNING

Risk of piercing by objects from the front!

Work where there is a risk of piercing from the front by large objects can result in accidents with serious injuries or death.

- ► A front guard must be installed in areas with a risk from large objects from the front.
- ► The vehicle operator must assess the hazardous situation and comply with national and regional regulations.
- ► The vehicle operator must ensure that the protective structures provide sufficient protection for the work

Information

The front guard corresponds to Level I in accordance with ISO 10262:1998.

- ► Despite fitting with protective structures, accidents cannot be completely excluded.

Information

For installation and dismantling two persons are required.

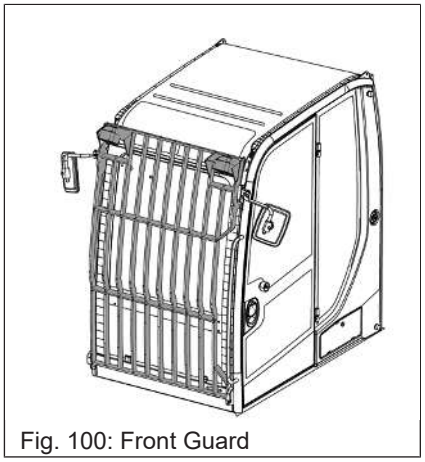

Fig. 100: Front Guard

1. Deactivate the vehicle safely. Switch off the engine.

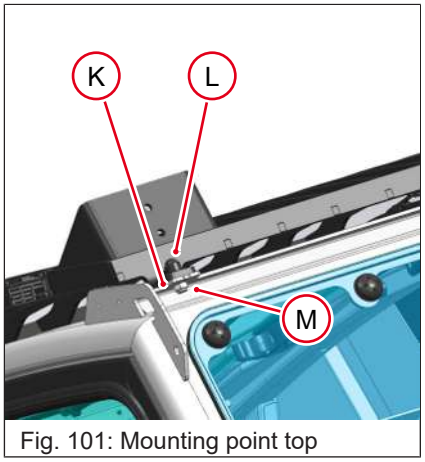

Fig. 101: Mounting point top

2. Assemble screws **L** and nuts **M** at mounting points **K** on the left and right with 110 Nm (81 ft.lbs.).

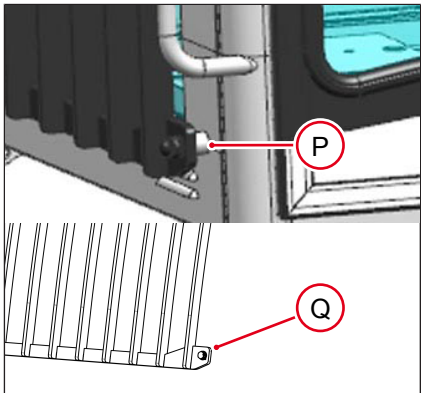

Fig. 102: Mounting points bottom

3. Assemble screws **Q** at mounting points **P** on the left and right with 110 Nm (81 ft.lbs.).
4. Attach caps to all bolts and nuts.

5.2.4.2 Splinter protection



⚠ WARNING

Risk of piercing by objects from the front!

When working where there is a risk of piercing through objects from the front, accidents with serious injuries or death may occur.

- ► In areas where there is a risk of being pierced by fragments whirled up from the front, the front window must be closed in case of the cab version.
- ► The vehicle operator must assess the hazardous situation and comply with national and regional regulations.
- ► The vehicle operator must ensure the protective structure is sufficient for the work.
- ► Observe the prescribed work area .



⚠ WARNING

Accident hazard if visibility is restricted!

Restricted visibility (e.g. weather conditions, dust, improper cleaning) can lead to accidents with serious injuries or death.

- ► Stop working immediately.
- ► Do not clean the splinter protection with abrasive cleaning agents (e.g. brushes, steel wool).
- ► Remove contamination only with liquid and non-aggressive aids.



Information

Shatter protection protects the operator from fragments being whirled up from the front.

- ► The vehicle owner must comply with national and regional regulations and inform the operator which protective structures must be used in the respective work situation.
- ► Despite fitting with protective structures, accidents cannot be completely excluded.



Information

The work area refers to a Wacker Neuson hydraulic breaker.

The work area may differ for other mounted attachments.

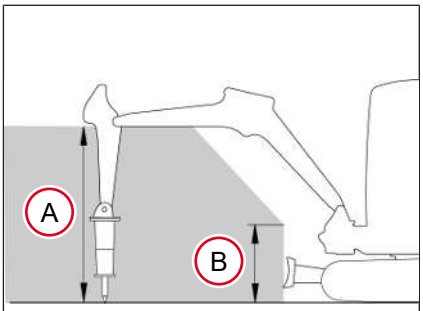

Fig. 103: Work area

Work area	Height in mm (in)
A	1200 (47)
B	500 (20)

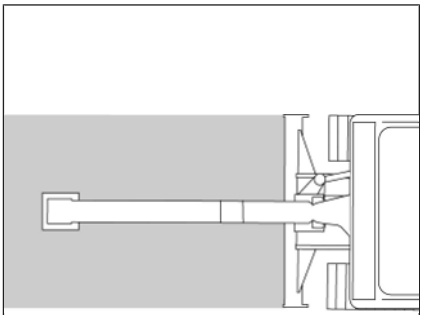

Fig. 104: Work area



Fig. 105: Installation splinter protection

Installing splinter protection

For installation and dismantling two persons are required.

Preparation see Parking the vehicle on page 103

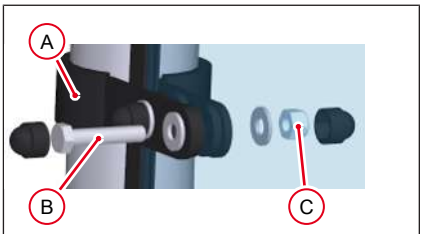

Fig. 106: Splinter protection mounting bracket

1. Mount splinter protection with mounting bracket **A**, screws **B** and nuts **C** to the frame.
2. Attach caps to all bolts and nuts.

Information

Torque for screws and nuts: 25 Nm (18 ft.lbs).

Disassembling the splinter protection

1. Loosen screws **B** and nuts **C**.
2. Remove the splinter protection.
3. Store the splinter protection safely.

5.2.5 Fire extinguisher

⚠ CAUTION

Risk of injury from unsecured fire extinguishers!

May lead to injuries.

- ► Check fastening gear and fire extinguisher daily.
- ► Observe the manufacturer's information and test intervals.

Wacker Neuson does not offer a fire extinguisher.

Please contact an authorized service center regarding the installation of a fire extinguisher.

Wacker Neuson recommends fire extinguishers of class ABC, e.g. in accordance with DIN EN 3, NFPA. Observe national and regional regulations.

5.3 Display

The display informs the operator about operating conditions, maintenance measures or possible malfunctions.

The symbols and the setting options can vary.

In addition to the symbols, a call sign can appear in the display and a warning buzzer sound The symbols may light up or flash at different rates.

5.3.1 Display settings

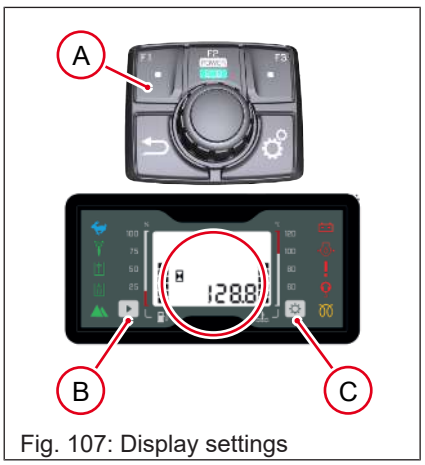

Fig. 107: Display settings

Status indications on the display

Press button **A** or **B**, until the desired content appears in the display.

Brightness settings

Press button **C** until the desired brightness is reached.

5.3.2 Indicator lights and symbols

Information

The control lights light up for a few seconds when the ignition is switched on.

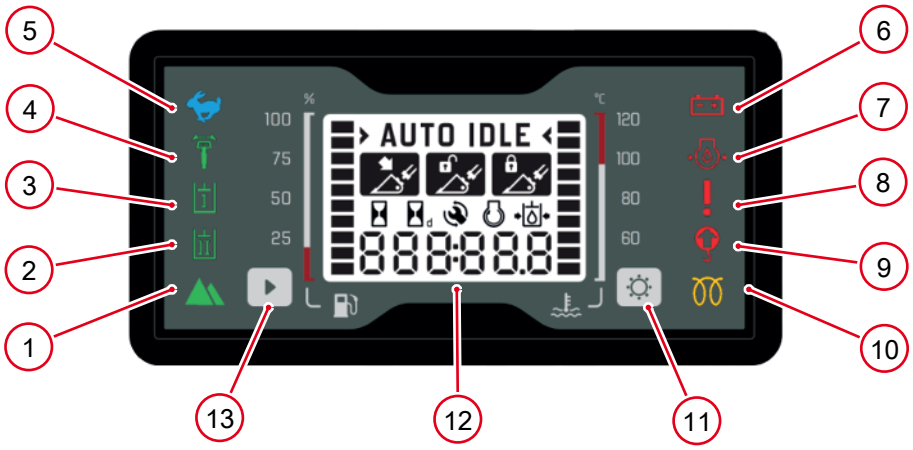

Fig. 108: Indicator lights

Item	Symbol	Color	Designation	Side
1		green	Engine operating mode	[} 98]
2		green	H2	[} 132]
3		green	H1	[} 127]
4		green	Swiveling boom	[} 112]
5		blue	Speed range 2	[} 100]
6		red	Charge indicator light	[} 198]
7		red	Engine oil pressure	[} 198]
8		red	General malfunction	[} 198]

Item	Symbol	Color	Designation	Side
9		red	Safe load indicator	[} 115] [} 198]
10		yellow	Pre-glow	[} 88]
11		--	**Brightness** button	[} 81]
12		--	Multi-function display	[} 83]
13		--	**Status indicator** button	[} 42]

5.3.3 Error messages and warnings

Symbol	Meaning	Side
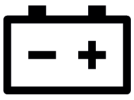	Charge indicator light	[} 198]
	Engine oil pressure	
	General malfunction	
	Overload indicator	

5.3.4 Status displays

Symbol	Meaning
AUTO IDLE	Automatic speed control
	Hydraulic power coupler activated
	Hydraulic power coupler open

Symbol	Meaning
	Hydraulic power coupler closed
	Operating hours
	Daily operating hours
	Maintenance meter
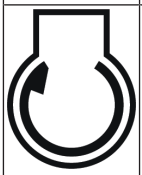	Engine speed
	Hydraulic oil pressure
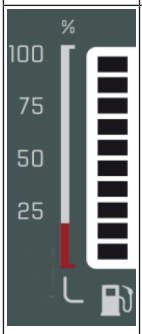	Fuel tank capacity/oil flow
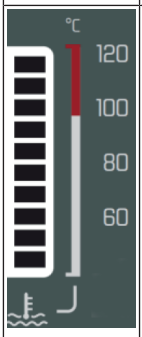	Coolant temperature

5.4 Putting the vehicle into operation

5.4.1 Before putting into operation

Requirements and instructions for the operating personnel

These operator's manual and all other documents supplied with the vehicle must be read, understood and followed.

The vehicle may only be operated by authorized persons.

The operator must know and take into account the requirements and risks at the workplace.

Before operating the vehicle, the operator must become familiar with the location of the controls and displays. Wacker Neuson recommends that you carry out your first attempts at operation on a large area without obstacles before starting work for the first time.

Do not get on or jump off the moving vehicle.

Do not operate the vehicle if a standard protective structure has been removed.

Before starting work or when changing operator, ensure that all visual aids are clean, functional and correctly set.

Keep steps and handles in a safe and secure condition. Remove dirt, oil, snow, etc. before starting work.

Constantly check the environment during operation in order to identify potential dangers in good time.

Body parts and clothing must not protrude from the vehicle during operation.

Modifications resulting in reduced visibility will void the vehicle's conformity and registration.

Perform daily maintenance according to the maintenance plan.

Carry out a visual inspection before starting work:

- There must be no leaks.
- Parts must not be damaged or loose.
- No one may be in the danger zone.

Comply with the safety instructions.

Comply with national and regional regulations.

5.4.2 Daily functional checks

5.4.2.1 Joystick base

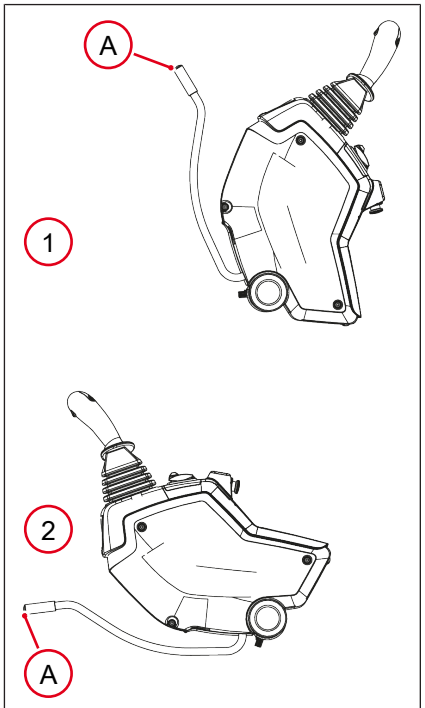

Fig. 109: Joystick base

Preparation joystick base

Item	Joystick base	Effect
1	Folded up	The engine can be started.
2	Folded down	The engine cannot be started.

If the joystick base is folded up while the engine is running, all hydraulic functions are locked.

Functional check for joystick base

Always conduct this check before start of work.

1. Start the vehicle.
2. Fold joystick base **A** down.
3. Driving over large areas.
4. Secure danger zone.
5. Stop the vehicle.
6. Fold up joystick base **A**.
7. Move all joysticks and pedals in all directions.

The controlled elements do not move:

- The vehicle is ready for operation.

The controlled elements move:

- Stop operation immediately. Contact an authorized service center.

5.4.2.2 Slewing gear brake

Check the slewing gear brake at operating temperature daily after work is completed.

When putting back into operation after a standing time of more than two weeks, check the slewing brake once before starting work.

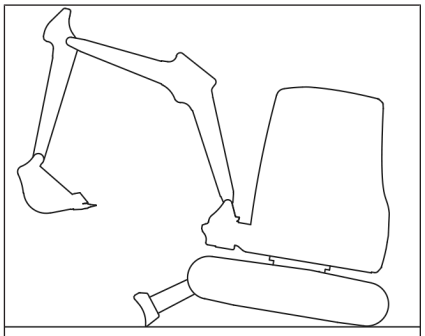
Fig. 110: Symbol display

1. Deactivate the vehicle safely.
2. Lift the vehicle with the dozer blade up to the stop.

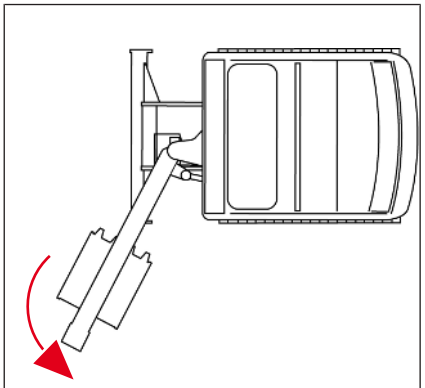

Fig. 111: Symbol display

3. Swivel the boom system to the left until the stop.

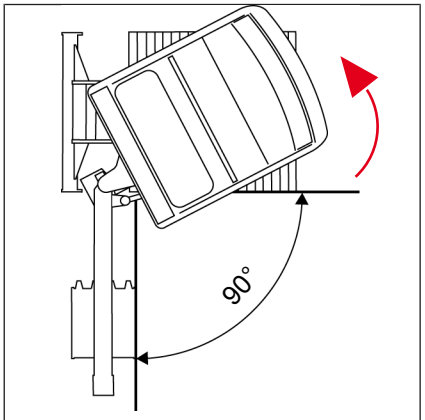

Fig. 112: Symbol display

4. Turn the upper carriage until the boom system is at 90° to the under carriage.

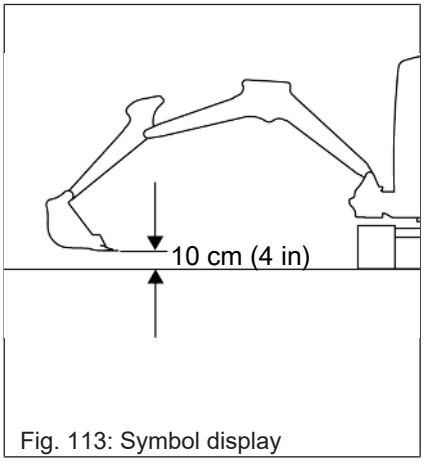

Fig. 113: Symbol display

5. Position the boom system as shown opposite.
6. Switch off the engine, remove the starting key and store it.
7. Fold up the joystick base.
8. Wait one minute.

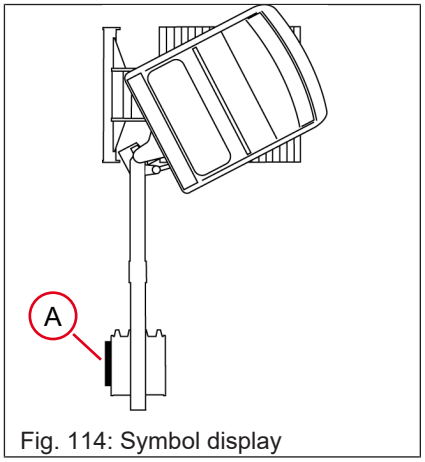

Fig. 114: Symbol display

9. Place measuring bar **A** on the attachment.
10. Wait one minute.

✓ The attachment has not moved away from the measuring bar:

▪ The vehicle is ready for operation.

✓ The attachment has moved away from the measuring bar:

1. Stop operation immediately.
2. Contact an authorized service center and have the fault rectified.

5.4.3 Initial putting into operation and running-in time

Before start of work for the first time, check the vehicle for completeness of the equipment supplied.

- Check liquid levels according to the **Maintenance** chapter.

On wheeled vehicles, check that wheel nuts are tight after ten hours of operation.

Drive and work gently with the vehicle for the first 50 hours of operation.

- Do not load the engine in cold operating condition.
- Do not change the speed abruptly.
- Avoid high engine speeds.
- Pay attention to leaks, unusual noises, discoloration of the exhaust gas, etc. Contact an authorized workshop if necessary.

5.4.4 Starting the engine



⚠ WARNING

Accident hazard due to unintentional operation of the vehicle!

Unintentional operation can result in serious injury or death.

► Only operate the vehicle from the seat with the seat belt fastened.



⚠ WARNING

Risk of crushing when operating with cold hydraulic oil!

Unexpected movements of the vehicle or the attachment can occur with cold hydraulic oil. This can lead to serious injuries or death.

► Even if the engine has reached its operating temperature, the hydraulic oil can still be cold.

► Operate controls carefully.

NOTICE

Damage caused by starting the engine too early after it has been switched off.

► Wait at least two minutes before trying to start again.

Information

Ventilate sufficiently when operating in closed rooms.

- The starter cannot be operated if the engine is already running.
- If the engine does not start after 30 seconds, abort the starting process and repeat after two minutes.
- If the engine does not start after several starting attempts, contact an authorized service center.

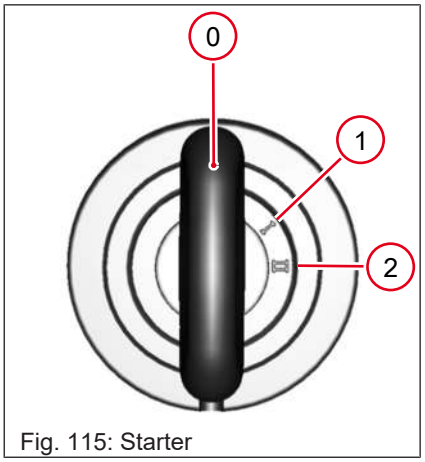

Fig. 115: Starter

Position	Function
0	Engine off, ignition off
1	Ignition on
2	Preheat the engine, start the engine

1. Sit down on the seat.
2. Switch off all electric consumers.
3. Turn the ignition key to the **Start engine** position.
4. Release the starting key.
   ⇨ Control light **preheat** lights up.
   ⇨ When the **pre-glowing** indicator lamp goes out, the engine starts automatically.

Turn the ignition key to the **engine off** position to cancel the starting process.

Information

The preheating display may appear on the display.

Warm-up phase

Warm up the vehicle at low speed and load until the engine has reached operating temperature.

Do not allow the engine to warm up while idling.

Low-load operation

NOTICE

Engine damage from low load operation.

► Operate the engine at idle or in the high speed range above 20% engine load.

Possible consequences of low load operation are:

- Higher motor oil consumption
- Shorter motor oil change intervals
- Engine contamination by motor oil in the exhaust system
- Blue smoke in exhaust gas
- Shorter diesel particulate filter regeneration cycles

Alternator

If the charge indicator light is defective, contact an authorized specialist workshop.

5.4.5 Autostop

The auto-stop system reduces emissions and saves fuel. The engine is automatically switched off when the system detects that the engine does not need to be running.

Under certain system conditions, the engine will not shut down. These conditions can e.g. be:

- Low coolant temperature
- High outside temperature
- High power consumption

However, there may also be system conditions that cannot be recognized by the operator. The system can therefore react differently under what appear to be the same system conditions.

If the engine has been stopped by the system, it must be started manually.



Fig. 116: Auto stop button

Auto stop	Operation	LEDs	Warning buzzer
Function On	Press the button	light green	--
Function Off	Press the button	--	--
The system stops the engine	--	flashing green	sounded
The system does not stop the engine	--	light red	--

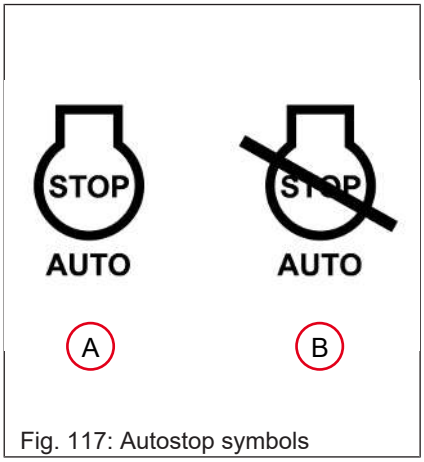

Fig. 117: Autostop symbols

When the engine is switched off by the system, the symbol **A** appears.

If the engine cannot be switched off by the system, the symbol **B** appears.

5.4.6 Switch off the engine

NOTICE

Damage to the engine due to shutdown under high engine load.

► Run the engine in idling mode for 60 seconds. This avoids engine damage and increases the service life.

1. Let the engine run in idling mode for 60 seconds with no load.
2. Switch off the ignition.

Information

Fold up joystick base after switching off the engine.

5.4.7 Starting aid

⚠ WARNING

Explosion hazard due to improper handling of the battery!

Improper handling of the battery can lead to serious injury or death.

► Wear protective equipment.

► Fire, open flame and smoking are prohibited.

► Do not jump start the engine if the battery is defective, frozen or if the battery fluid level is too low.

⚠ WARNING

Risk of injury from rotating parts!

Rotating parts can lead to serious injury or death.

► Remove the starting key and store it in a safe place.

► Open maintenance access only when the engine is switched off.



⚠ CAUTION

Burning hazard from hot surfaces!

May lead to injuries.

- ► Switch off the engine and let hot surfaces cool down.
- ► Wear protective equipment.



NOTICE

Damage due to short circuit or overvoltage.

- ► The positive terminal of the live battery must not touch any electrically conductive vehicle components.
- ► The vehicles must not touch each other while using starting aids.
- ► If the engine does not start despite starting aid, contact an authorized specialist workshop.



NOTICE

Damage caused by incorrect battery voltage

- ► Only use 12V batteries.



NOTICE

Damage caused by voltage spikes during jump starting.

- ► If possible, switch on an electrical consumer in the vehicle with an empty battery.



NOTICE

Damage to the jumpercable.

- ► Do not lay the jumper cables in the area of rotating parts.

Observe national and regional regulations.

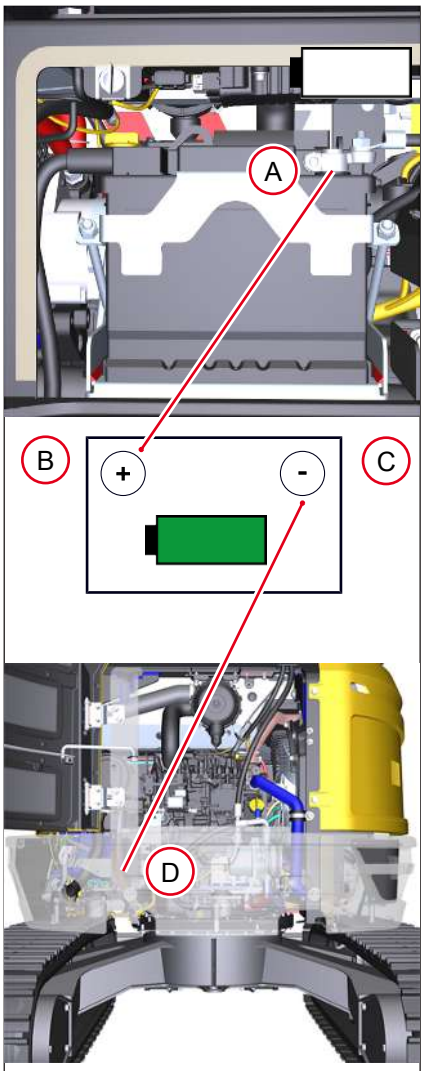

Fig. 118: Starting aid

Designations/ symbols	Meaning
X	Vehicle with empty battery
Y	Vehicle with full battery
A	Plus/vehicle **X**
B	Plus/vehicle **Y**
C	Minus/vehicle **Y**
D	Minus/vehicle **X** (A solid metal part firmly screwed to the engine block or the engine block itself)
	Full battery
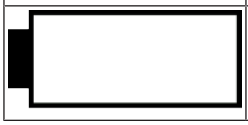	Empty battery

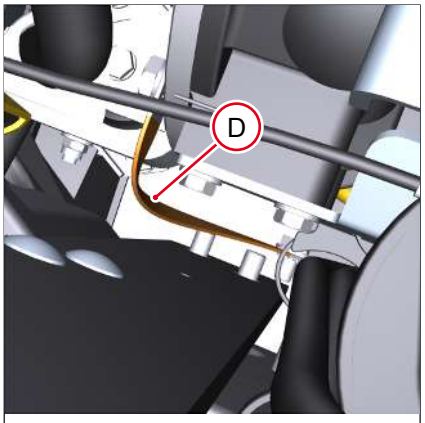

Fig. 119: Plus/vehicle X

1. Drive vehicle **Y** towards vehicle **X** in such a way that the length of the jumper cables is sufficient.
2. Switch off the engine of vehicle **Y**.
3. Open the maintenance accesses of the vehicles.
4. Connect jump leads in the following order: **A-B/C-D**.
5. Start the engine of vehicle **Y**.
6. Wait five minutes to allow the discharged battery to charge a little.
7. If possible, switch on an electric consumer for vehicle **X**.
8. Start the engine of vehicle **X**.
9. Terminate jump start leads in the following order: **D-C/B-A**.

5.4.8 Battery master switch



NOTICE

Damage to the electronics due to improper operation of the battery disconnect switch.

- ► Do not operate the battery disconnect switch when the engine is running.
- ► Do not actuate the battery disconnect switch for at least 70 seconds after switching off the engine.

Operate the battery master switch:

- When the vehicle is parked for a long period of time (e.g. weekend).
- If the vehicle is to be protected against unintentional start-up.
- If required by national and regional regulations.

Mechanical battery master switch

The battery master switch is located under the seat.



Fig. 120: Battery master switch

Power supply	Functionality
Manufactured	The key cannot be removed
Interrupted	The key can be removed

5.4.9 Drive interlock

5.4.9.1 Ignition lock immobilizer

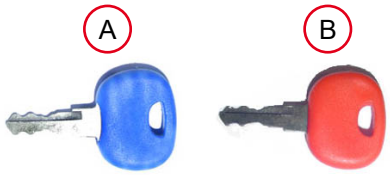

Fig. 121: Ignition key/master key

A = Starting key (blue, 2 pcs.)

B = Master key (red, 1 pc.)

Information

Only the master key can be used to teach new starting keys. If the master key is lost, a new immobilizer must be installed.

Teaching the starting key

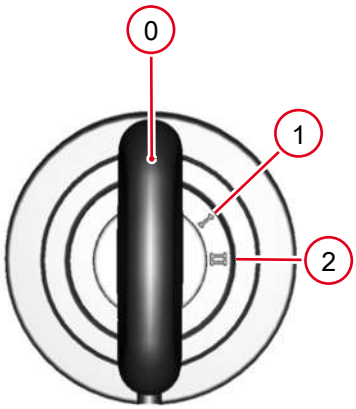

Fig. 122: Starter

1. Turn master key **B** to position **1** for a maximum of five seconds.
2. Remove master key **B** and place it at least 50 cm (20 in) from the starter.
3. Turn a new starting key to position **1** for at least one second within 15 seconds.
   ⇨ The starting key has been taught.
4. Repeat point 3 if additional starting keys are to be taught.

A maximum of ten starting keys can be taught.

Information

If the system does not detect a key to be taught for 15 seconds, the process is aborted.

Deleting taught key

If a taught key has been lost, all taught keys must be deleted. The master key code will not be deleted.

1. Turn master key **B** to position **1** for at least 20 seconds.
2. Teach the starting key.

5.4.9.2 EquipCare Dual ID



Fig. 123: Keypad

The EquipCare Dual ID drive interlock can be used in combination with **Telematic**. Store the PIN at **equipcare.wackerneuson.com**. The vehicle can only be started with the correct PIN.

Item	Element	Function
A	LED 1	Lights up yellow when the keypad is ready for use
B	LED 2	Not assigned
C	LED 3	Lights up green when the PIN is correct Does not light up when the PIN is incorrect
D	Confirm	Confirm PIN
E	Stop	Cancel input

If the keypad is in sleep mode, switch on the ignition.

6 Operation

6.1 Brakes

6.1.1 Hydraulic brake

Information

Reduce the speed with the drive levers or drive pedals and not with the manual throttle.

The vehicle brakes when the drive levers or gas pedals are released.

When driving downhill, the automatically acting hydraulic brake valves prevent the permissible driving speed from being exceeded.

6.1.2 Mechanical brake

Press the dozer blade to the ground.

6.2 Steering

Movement	Drive lever/drive pedals
Steer to the left	
Steer to the right	
Steer to the left	
Steer to the right	

6.3 Regulating rotational speed

6.3.1 Manual throttle



Fig. 124: Manual throttle

RPM	Controller
Increase	Clockwise
Reduce	Counterclockwise

6.3.2 Automatic speed control

The engine goes to idling speed if the hydraulics are not operated for a few seconds.

If the hydraulics are operated, the engine revs up to the rotational speed set on the manual throttle.



Fig. 125: Jog Dial F3

Automatic speed control	Operation
On/Off	Press the **F3** button.

6.3.3 Engine operating mode

Change engine operating mode directly



Fig. 126: Change operating mode

Press the F2 button.

Engine operating mode	Application	Display
Recovery mode	Powerful and efficient work	
POWER	Maximum performance	--

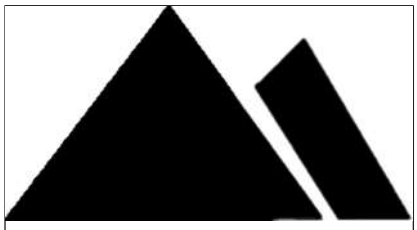

Fig. 127: Recovery mode

Operation at high altitudes

If the limit of 1600 m (5,249 ft) is exceeded while driving, switch off the engine and restart it after two minutes so that the mountain mode can be activated.

6.4 Drive

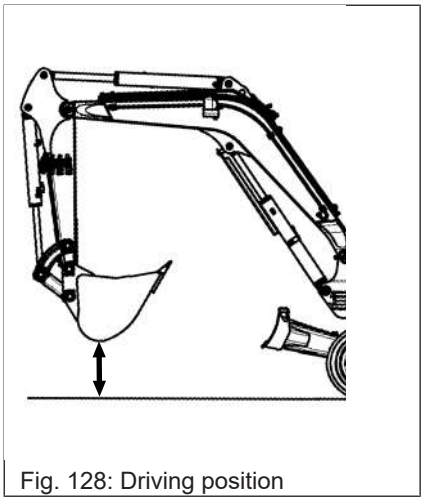

Fig. 128: Driving position

Driving position

Lift the vehicle supports completely. Position the arm system as illustrated, align straight and raise 20-30 cm (8-12 in).

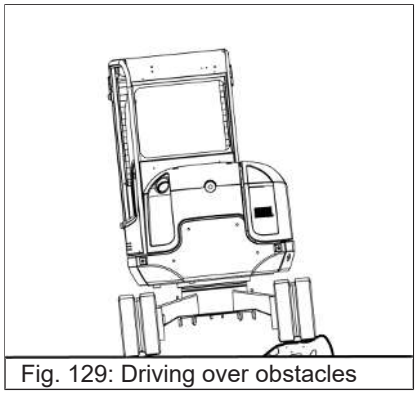

Fig. 129: Driving over obstacles

Driving over obstacles

Only drive over obstacles at low speed.

6.4.1 Selecting the direction of travel



⚠ WARNING

Risk of injury due to incorrectly set drive direction!

Can cause serious injury or death.

► Ensure that the area around the vehicle is free.

Drive direction	Drive lever/drive pedals
forward	
reverse	

6.4.2 Selecting speed range

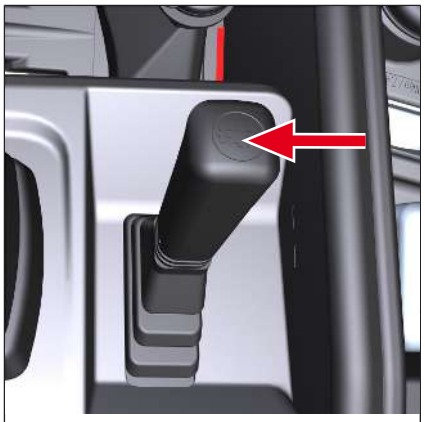
Fig. 130: Selecting a speed range

Speed range	Operation
1 or 2	Press the button

When speed range 2 is selected, the vehicle switches to **Auto 2-Speed** mode.

In speed range 2, the vehicle has less traction.

Depending on the driving resistance, the vehicle automatically selects the speed range.

6.4.3 Starting to drive



⚠ WARNING

Risk of injury due to incorrect operation!

If the upper carriage has been turned by 180°, the vehicle moves in the opposite direction.

Incorrect operation can lead to serious injuries and death.

- ► Check the danger zone before starting.
- ► Operate the drive levers and gas pedals slowly and carefully.



⚠ WARNING

Accident hazard due to an incorrectly turned upper carriage!

An incorrectly turned upper carriage blocks the view of the drive route. This can cause severe injuries or even death.

- ► Before starting up, align the upper carriage so that the operator has an unrestricted view of the planned route.

Information

The joystick base must be folded down for starting.

Starting to drive

Operating the drive lever or drive pedals.

- The vehicle starts driving.

Stopping

Release the drive lever or drive pedals.

- The vehicle stops.

6.4.4 Slope drive



⚠ WARNING

Crushing hazard due to the vehicle tipping over!

A tipping vehicle can lead to serious injury or death.

- ► Lift the boom system 20-30 cm (8-12 in) from the ground and align it straight.
- ► In an emergency, lower the boom system immediately to gain stability.
- ► Only drive on slopes on a stable and level surface.
- ► Adjust the travel speed to the specific conditions.
- ► Avoid abrupt movements.
- ► Pay attention to persons and obstacles.
- ► Observe the operating limits of the vehicle.
- ► Drive uphill and downhill in speed range **1** only.
- ► Do not reverse when driving downhill.
- ► Body parts must not protrude from the vehicle.
- ► Do not exceed the weights indicated in the lifting capacity charts and load capacity charts.
- ► The upper carriage and boom system must not be rotated or swiveled when driving uphill or downhill with a loaded attachment.
- ► Diagonal driving is prohibited.

6.4.4.1 Driving uphill and downhill

The vehicle may lose traction even on slight inclines if it is driving on a slippery substrate surface (e.g. grass, damp metal surfaces, frozen ground).

On stony or uneven surfaces the vehicle may slip or tip over.

On a soft surface, the vehicle may tip or get stuck.

- Lift the boom system 20-30 cm (8-12 in) from the ground and align it straight.
- Avoid abrupt movements.
- To minimize the tipping hazard, adjust the speed to the conditions.
- Observe the operating limits of the vehicle.

If the engine stalls while driving up or downhill, move the joysticks to neutral and start the engine.

Operating limits for driving on slopes

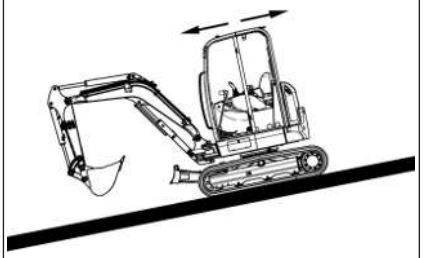	**Driving uphill and downhill (downhill arm system)** Permitted up to a slope of **30°**
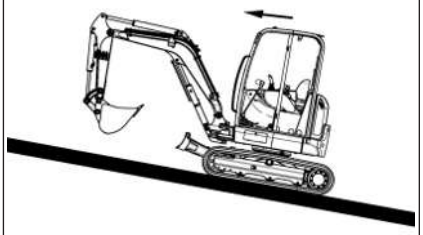	**Driving uphill (arm system uphill)** Permitted up to a slope of **15°**
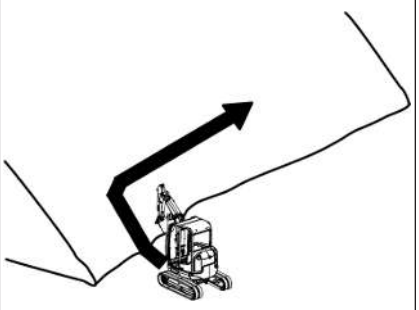	**Lateral slope drive** Permitted up to a slope of **15°**

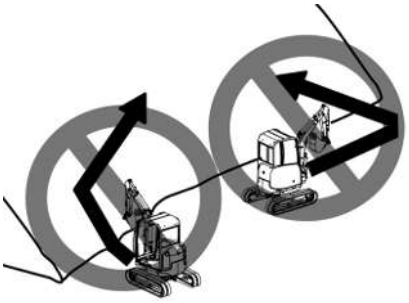	**Diagonal drive** Prohibited
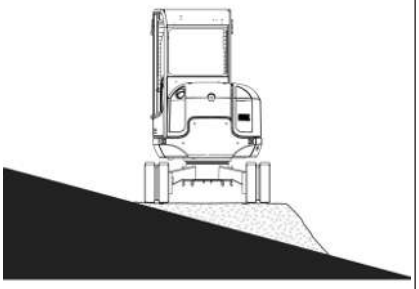	**Working on lateral slopes** Only permitted on a horizontal, load-bearing and level surface. If the slope is too steep, pile up material to create a horizontal, load-bearing, level footprint.

6.4.5 Parking the vehicle



⚠ WARNING

Crushing hazard due to the vehicle rolling away after parking!

An unsecured vehicle can lead to serious injury or death.

► Lower the boom system and dozer blade to the ground.



Information

Fill up the tank after each working day. This prevents condensation from forming in the fuel tank.

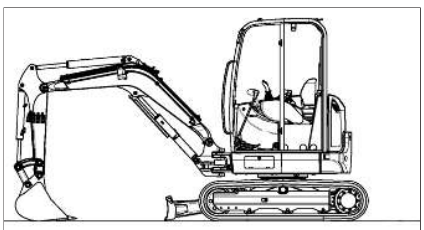

Fig. 131: Parking the vehicle

1. Deactivate the vehicle safely.
2. Align the boom system straight.
3. Lower the boom system and dozer blade to the ground.
4. Switch off the engine.
5. Release pressure in the hydraulic system.
6. Remove the starting key and store it in a safe place.
7. Fold up the joystick base.
8. Close windows and doors .
9. Close and lock covers and doors .

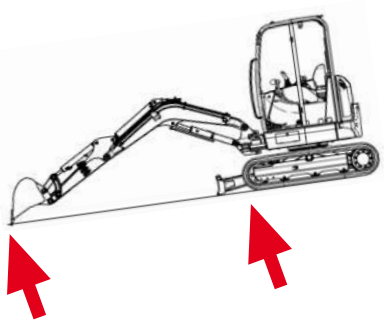

Fig. 132: Parking the vehicle on slopes

Parking on slopes

If parking on a slope is necessary, observe the following:

- Position the boom system on the downhill side and press the attachment onto the ground.
- Position the dozer blade on the downhill side and press it onto the ground.

6.5 Driving with a trailer

The vehicle is not authorized for a trailer operation.

6.6 Lighting and signaling system

6.6.1 Work light



⚠ WARNING

Accident hazard due to blinded road users!

Vehicle users on public roads may be blinded by switched on work lights. This can lead to serious injuries or death.

► Only work when the work area is adequately illuminated and no road users are blinded.



Information

Only work when the work area is adequately illuminated. If the work area is still insufficiently lit despite work lights and external illumination, stop work.

The switches are located in the left switch panel.

Work light	Operation
Boom on	Switch in position 1
Lifting arm and cab on	Switch in position 2
Off	Switch in position 0

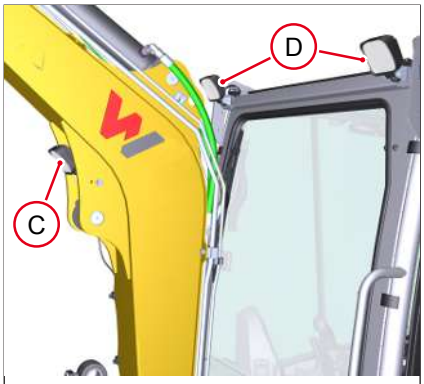

Fig. 133: Working headlight front



Fig. 134: Rear cab headlight

Position	Designation
C	Boom headlights
D	Cab headlights front and rear

6.6.2 Orange beacon

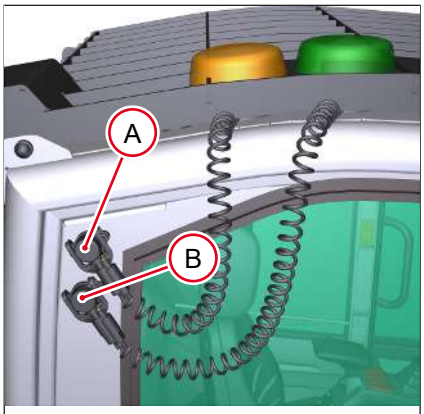

Fig. 135: Orange rotating beacon

The orange rotating beacon has a magnetic base and is attached to the cab roof. Power is supplied via the 12V plug receptacle **A**.

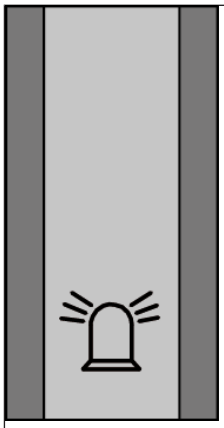

Fig. 136: Orange rotating beacon switch

Orange rotating beacon	Operation
On	Switch down
Off	Switch up

Information

Observe national and regional regulations.

6.6.3 Green rotating beacon

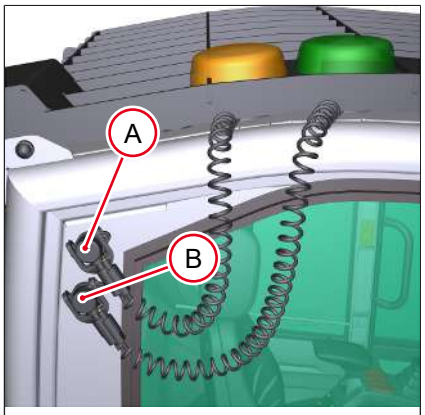

Fig. 137: Green rotating beacon

The green rotating beacon has a magnetic base and is attached to the cab roof. Power is supplied via the 12V plug receptacle **B**.

Information

Observe national and regional regulations.

6.6.4 Interior light



Fig. 138: Interior light

Interior light	Operation
On	Lamp to the left or right
Off	Lamp in middle position

6.6.5 Horn



Fig. 139: Joystick left

Press button on the left joystick.

6.6.6 Travel signal



⚠ WARNING

Risk of accident while driving!

Can cause serious injury or death.

- ► No one may be in the danger zone.
- ► Despite the travel signal, the danger zone must also be visually monitored.
- ► If there is no driving signal, stop working immediately and contact an authorized specialist workshop. Observe national and regional regulations.

The travel signal sounds as soon as at least one of the two drive chains moves.

6.7 Washer system



NOTICE

Damage to the pump due to an empty washer fluid tank.

► Do not operate the spray function.

► Refill windscreen cleaner.



NOTICE

Damage to the windscreen wiper when the windscreen is folded up

► Do not operate the windscreen wiper when the front window is folded up.

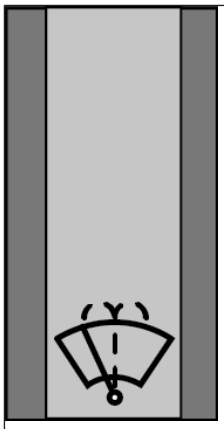

Fig. 140: Windscreen washer system front

Function	Operation
Wipe in	Switch in position **1**
Spray in	Hold switch in position **2**
Spray out	Release switch
Wipe out	Switch in position **0**

6.8 Heating, ventilation and air conditioning system

6.8.1 Heating and ventilation

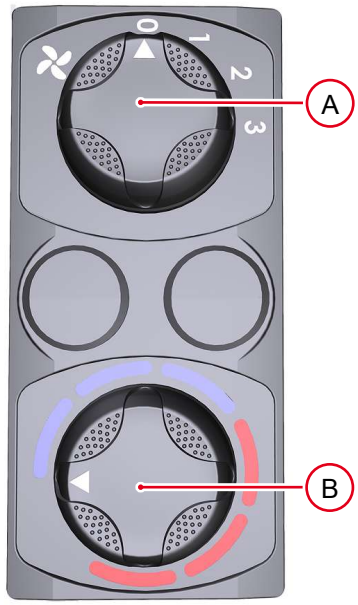

Fig. 141: Temperature control

Set the temperature (**B**) and ventilation (**A**).

In the **0/OFF** position, the complete system including the ventilation and temperature control is switched off.

6.8.2 Air conditioning system



⚠ CAUTION

Damage to health caused by improper use of the air conditioning system!

Can lead to health impairments.

► Do not point air vents directly at face.



NOTICE

Damage caused by improper operation of the air conditioning system.

Switch on the air conditioning even when the outside temperature is low.

The air conditioning system cools and dehumidifies the interior.

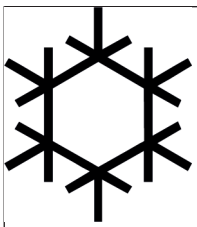

Fig. 142: Air conditioning system symbol

Air conditioning system	Operation
On/Off	Press the button

Cool down the interior quickly

1. Open windows and doors.
2. Set ventilation to maximum power to allow hot air to escape.
3. Close windows and doors .
4. If possible, switch to recirculation mode.
5. Set air conditioning system to maximum cooling.
6. When the interior temperature is comfortable, switch to fresh air mode.

6.9 Working with the vehicle

Observe the operating limits see Operating limits on page 16.

6.9.1 Basic functions joystick

Control type	Function	ISO control		SAE control	
		Joystick left	Joystick right	Joystick left	Joystick right
					
	Turn upper carriage to the left	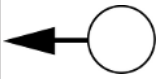	--	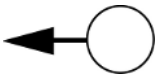	--
	Turn upper carriage to the right	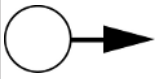	--	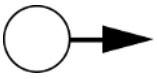	--
	Extend dipper stick	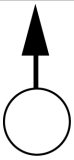	--	--	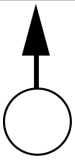
	Retract dipper stick	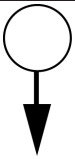	--	--	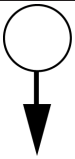
	Lower boom	--	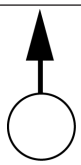	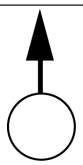	--
	Lift boom	--	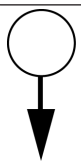	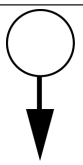	--
	Screw in bucket	--	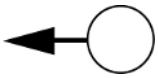	--	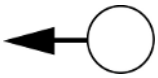
	Turn out bucket	--	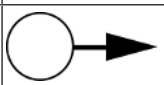	--	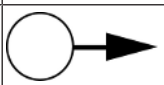

6.9.2 Toggle ISO/SAE control

⚠ WARNING

Accident hazard due to a changed setting of the control mode!

A changed setting may result in incorrect operation which may lead to serious injury or death.

► Before starting work, check the set control mode.

The vehicle is equipped with ISO control as standard. SAE control can be fitted as an option. This results in differences in the direction of movement of the attachment and lifting arm.

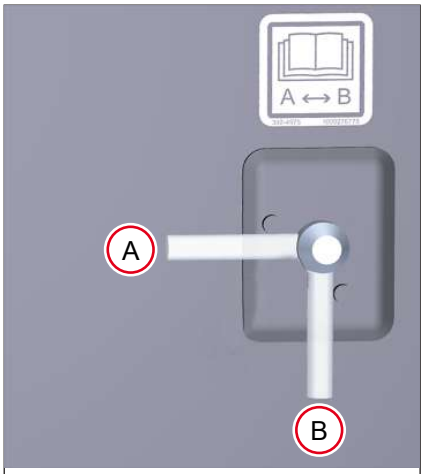

Fig. 143: ISO/SAE toggle

Control	Position
ISO	A
SAE	B

6.9.3 Turning the upper carriage

⚠ WARNING

Crushing hazard in the danger zone of the vehicle!

Persons in the danger zone of the vehicle can be seriously injured or killed.

► No one may be in the danger zone.

NOTICE

Damage to the vehicle when working near obstacles.

► There must be no obstacles in the danger zone.

Information

When the hydraulic oil is cold, the upper carriage can continue moving after the joystick is released. Operate the joystick carefully.

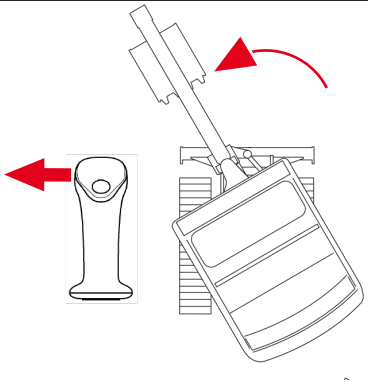

Fig. 144: Turn upper carriage to the left

Turning the upper carriage	Left joystick
To the left	To the left
To the right	To the right

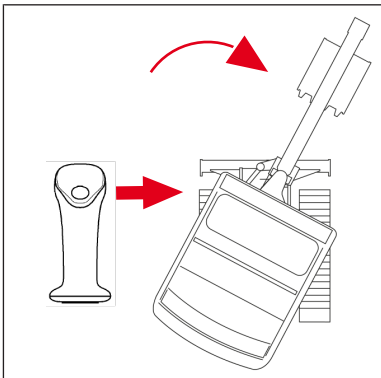

Fig. 145: Turn upper carriage to the right

6.9.4 Braking the upper carriage

Normal braking: release the joystick.

Maximum braking: Push the joystick in the opposite direction until the uppercarriage comes to a standstill.

6.9.5 Swiveling booms



Fig. 146: Swiveling boom

Select the function **Swiveling boom** with the button on the left joystick.

Swiveling boom	Operation
To the left	Controller to the left
To the right	Controller to the right

6.9.6 Vehicle support

6.9.6.1 Dozer blade

⚠ WARNING

Crushing hazard due to improper operation!

Unintentional operation can lead to serious injury or death.

- ► Fold up the joystick base.
- ► Lower the stabilizer blade to the ground after finishing work.
- ► No one may be in the danger zone.

Information

If the stabilizer blade is lowered too low, there may be high resistance.

- ► Position the stabilizer blade just above the ground when grading.

Information

The vehicle has the best stability with the outriggers lowered.

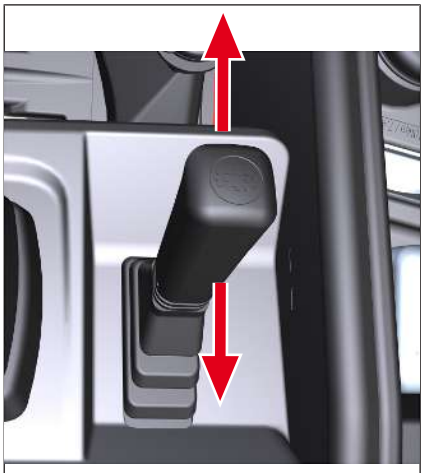

Fig. 147: Raise/lower the dozer blade

Dozer blade	Lever
Raising	To the rear
Lowering	To the front

6.9.7 Hose breakage

1. Stop the vehicle immediately.
2. Switch off the engine.
3. If possible, lower the arm system. see Emergency lowering on page 117
4. Put the controls in the neutral position.
5. Fold up the joystick base.
6. Remove the ignition key and lock the vehicle.
7. Mobile excavator: Secure the vehicle against rolling away.
8. Contact an authorized service center.

Environment

Collect leaking vehicle fluids with a suitable container and dispose of them in an environmentally friendly manner.

6.9.8 Lifting gear applications

Lifting gear applications refers to lifting, transporting and lowering loads with the help of a lifting devices and fastening devices.

⚠ WARNING

Crushing hazard due to the vehicle tipping over!

A tipping vehicle can cause serious injury or death.

- ► Do not exceed the weights indicated in the load capacity charts.
- ► Subtract the weight of the attachment and load from the weight in the relevant chart column.
- ► Take the density of the load into account.
- ► The ground must be horizontal, stable and even.
- ► Only operate the vehicle in lifting gear application if the prescribed lifting equipment and safety devices are present, functional and activated.
- ► The boom system must stand straight in relation to the cab.

NOTICE

Damage caused by an overturning vehicle.

- ► Do not exceed the weights indicated in the load capacity charts.

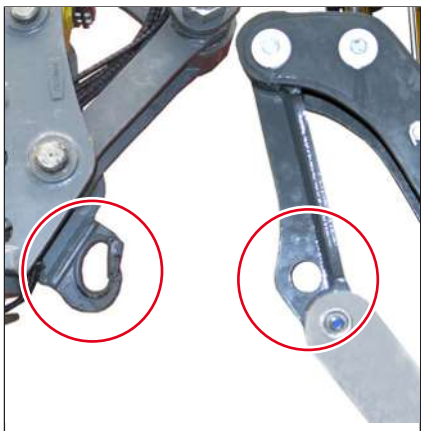

Fig. 148: Lifting gear

Only the following lifting gear applications may be used for hoisting:

- Powertilt/power coupler with load hook
- Joint rod with lifting eye

6.9.9 Safe load indicator

⚠ WARNING

Hazard as a result of the vehicle tipping over if the overload indicator is not observed!

A tipping vehicle can cause serious injury or death.

- ► Reduce the bearing load until the warning buzzer stops and the control light goes out.
- ► Observe the load capacity charts.

⚠ WARNING

Accident hazard due to a switched off or defective safe load indicator!

A tipping vehicle can cause serious injury or death.

- ► Switch on the safe load indicator during lifting gear application.
- ► Only operate the vehicle with a functioning safe load indicator.

The overload indicator warns the operator visually and acoustically if the bearing load is too high.



Fig. 149: Overload indicator button

Overload indicator	Operation	Display	LEDs
Activate	Press the button		Green
Deactivate	Press the button	--	--

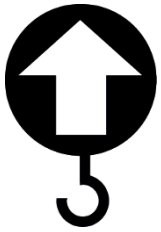

Fig. 150: Overload symbol

As soon as the **Overload** display appears and the warning buzzer sounds:

- Reduce the load capacity until the warning buzzer stops and the **Overload** display goes out.

Functional check of overload warning device

A functional check of the overload indicator must be carried out before every lifting gear applications.

1. Start the vehicle.
2. Driving over large areas.
3. Secure danger zone.
4. Stop the vehicle.
5. Switch on overload indicator.
6. Lift the boom up to the stop and hold the joystick in this position.

Warning device	Display	LEDs	Consequences
Warning buzzer sounds and display appears		Red	The vehicle may be used in lifting gear application.
Warning buzzer does not sound or the display is on	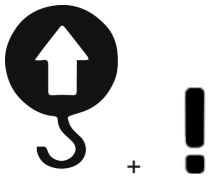	--	The vehicle may not be used in lifting gear application. Contact an authorized service center.

6.9.10 Load hold function



⚠ WARNING

Risk of injury due to fluid leakage under pressure!

Hydraulic oil escaping under pressure can penetrate the skin and cause serious injury or death.

- ► No one may be in the danger zone.
- ► In the event of hose breakage, move the control elements to neutral position so that as little hydraulic oil as possible escapes.



⚠ WARNING

Burning hazard from hot hydraulic oil!

Hot hydraulic oil can cause scalding to the skin and serious injury or death.

- ► Release pressure in the hydraulic system.
- ► Let the engine cool down.
- ► Wear protective equipment.



Information

Hose rupture valves are set at the factory and secured with seals. If a seal is removed or the hose rupture valve is tampered with, correct operation is no longer ensured and the warranty is voided.

Environment

Collect leaking vehicle fluids with a suitable container and dispose of them in an environmentally friendly manner.

In the event of a hose rupture, return the controls to the neutral position.

6.9.11 Emergency lowering

⚠ WARNING

Crushing hazard when lowering the boom system!

Can cause serious injury or death.

► No one may be in the danger zone.

Information

Lower the boom system immediately after an engine standstill.

1. Switch on ignition.
2. Fold down the joystick base.
3. Lower the boom system completely.
4. Move joysticks to neutral position.

6.9.12 Mounting and dismantling the bucket

Dismantle bucket

⚠ WARNING

Crushing hazard when putting down attachments!

An attachment that has not been placed down correctly may tip over and cause serious injury or death.

► No one may be in the danger zone.

► Set down the attachment securely on a horizontal, load-bearing and level surface.

► Do not remove the bolt from the attachment until it is secure.

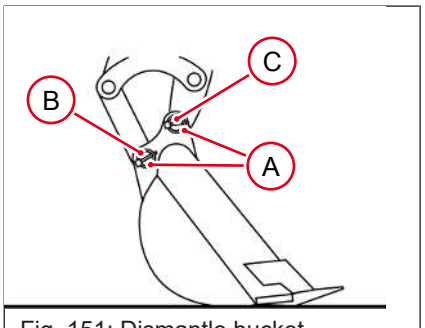

Fig. 151: Dismantle bucket

1. Place the bucket with the flat underside on a level surface.
2. Park the vehicle. Switch off the engine.
3. Remove splint **A**.
4. First remove bolt **B**, then bolt **C**. Carefully knock out stuck bolts with a hammer and brass mandrel.

If bolt **C** is jammed:

1. Start the engine.
2. Raise or lower the boom system slightly to relieve the bolt.
3. Park the vehicle. Switch off the engine.
4. Fold up the joystick base.
5. Remove the starting key and store it in a safe place.

Mount bucket



⚠ WARNING

Crushing hazard when picking up attachments!

Improper mounting of attachments can lead to serious injury or death.

- ► Remove the starting key before mounting an attachment and store it.
- ► Wear protective equipment when fitting the bucket bolts.
- ► Only use undamaged attachments and bucket bolts.
- ► Align the mounting holes of the attachment so that the bucket bolts can be fitted more easily.
- ► Make sure that the danger zone of the vehicle is clear after mounting the attachment.
- ► After mounting, lift the attachment slightly and turn it in and out completely several times quickly.
- ► Only operate the vehicle with a securely locked attachment.

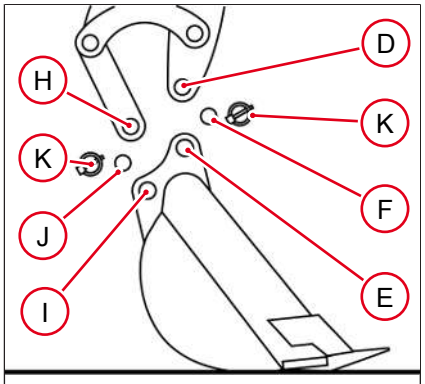

Fig. 152: Mount attachment

1. Mount only one bucket with its flat underside on a flat surface.
2. Deactivate the vehicle safely. Switch off the engine.
3. Grease bolts and joints.
4. Start the engine.
5. Align dipper stick until holes **D** and **E** align.
6. Switch off the engine. Fold up the joystick base.
7. Fit bolt **F**.
8. Actuate bucket cylinder until holes **H** and **I** align.
9. Switch off the engine. Fold up the joystick base.
10. Fit bolt **J**.
11. Fit splint **K** .

6.9.13 Permitted work

6.9.13.1 Support the vehicle

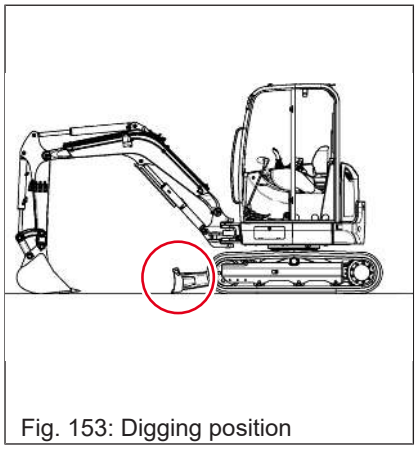

Fig. 153: Digging position

Digging position

Align the dozer blade to the excavation side.

Working on slopes



⚠ WARNING

Tipping hazard on slopes!

A tipping vehicle can cause serious injury or death.

- ► Secure slopes before working. Take the ground conditions, vehicle weight etc. into account.
- ► Support the vehicle with the dozer blade or claws when digging.

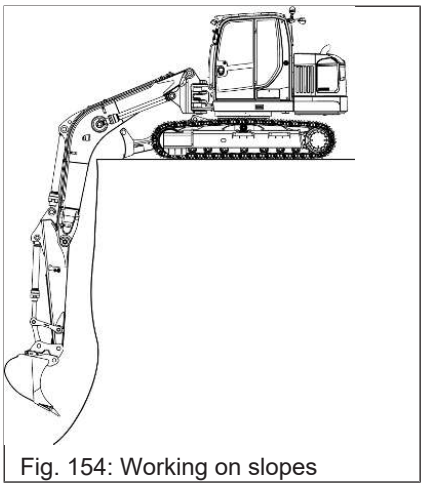

Fig. 154: Working on slopes



NOTICE

Damage caused by improper operation of the boom system.

- ► The piston rod of the lifting arm cylinder must not touch the dozer blade, the claws or the gripper bracket.

6.9.13.2 Working with the bucket

For example, work with a backhoe bucket is described.

Align the dozer blade to the excavation side.

Information for the excavation

Wacker Neuson recommends that the following points be observed when planning and carrying out excavation work:

1. The exit from an excavation pit should be outside the excavation line and as shallow as possible.
2. If possible, carry out the excavation in adjacent strips.
3. A vehicle with a fully loaded bucket must be able to drive forwards out of the excavation pit.
4. Carry out downhill transport journeys backwards with a loaded bucket.

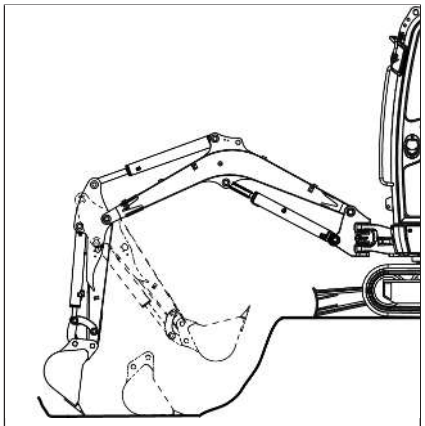

Fig. 155: Bucket position

Bucket position when digging

Move dipper stick and bucket long and flat.

At an angle of 80° to 120° between the boom and dipper stick, the digging force is greatest.

1. Push the bucket into the ground.
2. Lower the dipper stick and align the bucket until the bottom of the bucket is parallel to the ground.
3. Move the dipper stick towards the vehicle and turn the bucket in.

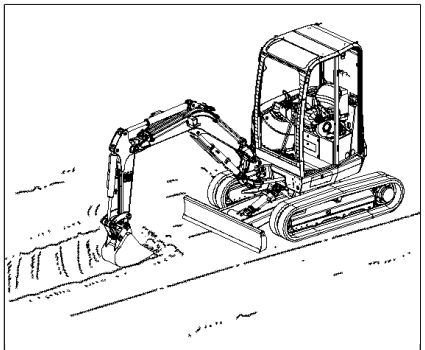

Fig. 156: Digging trenches

Digging trenches

Align tracks parallel to the trench. For wide trenches, first dig the sides and then the middle.

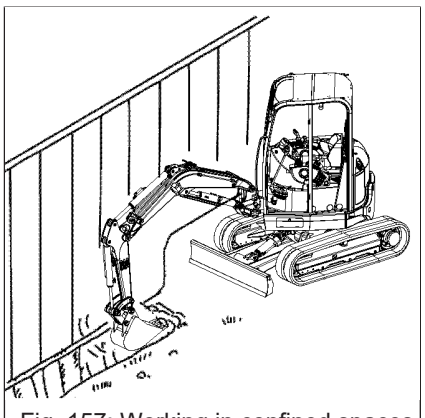

Fig. 157: Working in confined spaces

To dig sideways in a confined space, turn the upper carriage and swing the boom system.

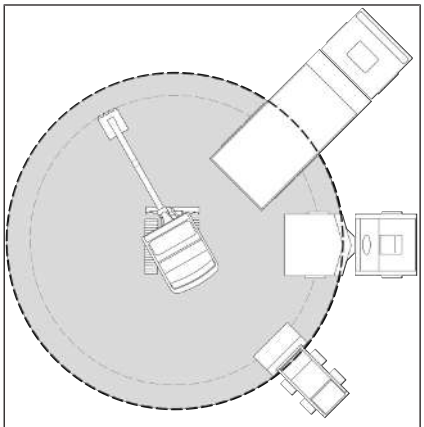

Fig. 158: Danger area when loading

Loading transport vehicles

1. Position the transport vehicle so that the cab of the transport vehicle is outside the danger zone of the excavator.
2. Load the loading area starting from the rear.
3. Keep the angle of rotation as small as possible.
4. Only lift the filled bucket to unloading height when the upper carriage is swiveled towards the transport vehicle.
5. If possible, load the load in the direction of the wind.
6. The transport vehicle and the digging direction of the bucket should form an angle of 45° if possible.

If the vehicle is stuck

1. Turn out the bucket until the cutting bar is vertically above the ground.
2. Lower the boom system completely.
3. Slowly turn out the bucket. This pushes the vehicle backwards.
4. Slowly reverse the vehicle.
5. Repeat the procedure until the vehicle is on non-slip ground.
6. Drive the vehicle away backwards.

High bucket operation



NOTICE

Damage to the dipper stick when the bottom of the bucket hits the dipper stick.

► Do not completely turn out the bucket during high bucket operation.



Fig. 159: Symbolic representation

6.9.13.3 Leveling

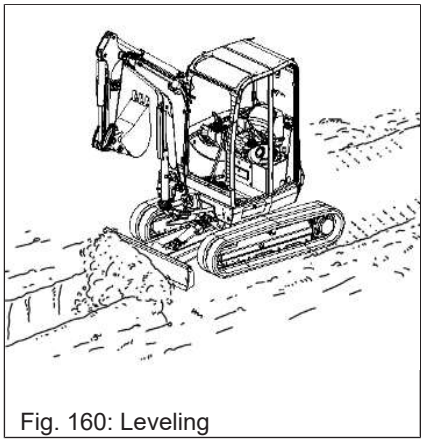

Fig. 160: Leveling

Leveling

The dozer blade is used to backfill trenches and level surfaces.

- Lower the dozer blade to the desired height.

⇨ The vehicle must not be lifted by lowering the dozer blade.

⇨ The vehicle must not dig itself in and sink.

6.9.14 Prohibited works



NOTICE

Prohibited work can damage the vehicle or the attachment.

6.9.14.1 Working with torque or pivoting force



Fig. 161: Rotating force/swivel force

Do not tear down walls or level surfaces with the rotating force of the upper carriage or the swivel force of the boom system.

6.9.14.2 Working with driving force

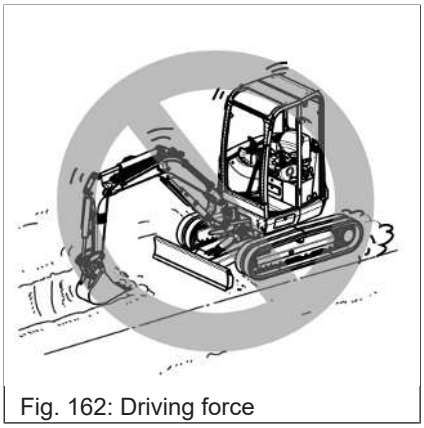

Fig. 162: Driving force

Do not lower the attachment to the ground while driving.

6.9.14.3 Working with the falling force of the attachment

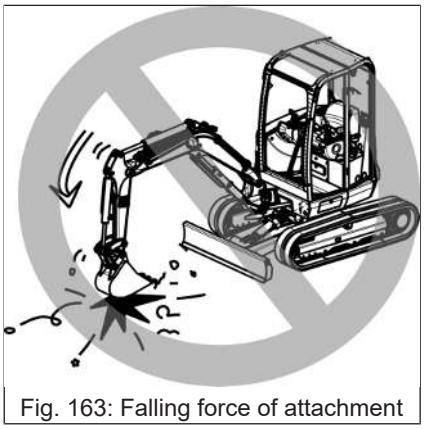

Fig. 163: Falling force of attachment

Do not work with the falling force of the attachment.

6.9.14.4 Working with the falling force of the vehicle

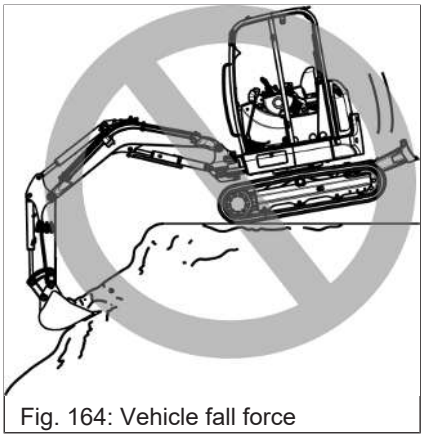

Fig. 164: Vehicle fall force

Do not work with the vehicle's own weight.



Fig. 165: Vehicle fall force

6.9.14.5 Support the vehicle on one side with the dozer blade

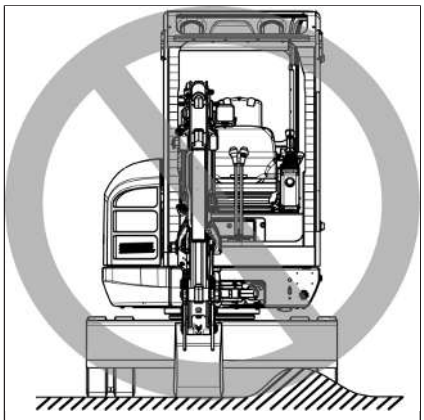

Fig. 166: Dozer blade

Do not load the dozer blade on one side.

6.9.14.6 Damaging the dozer blade with obstacles or attachments

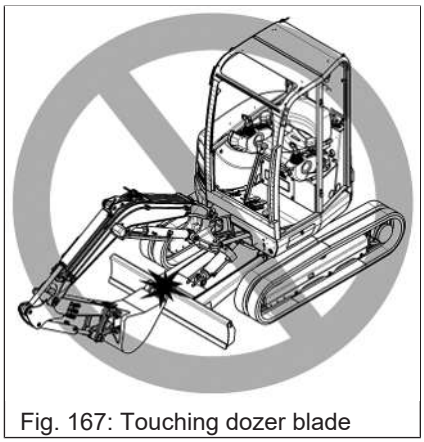

Fig. 167: Touching dozer blade

The dozer blade and dozer blade cylinder can be damaged by collision with obstacles or attachments.

6.10 Operating additional control circuits

6.10.1 Hydraulic connections

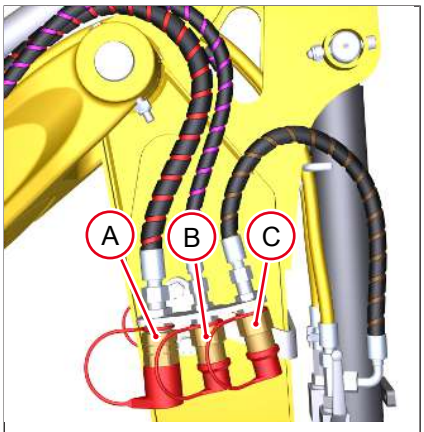

Fig. 168: Auxiliary control circuit right

Position	Connection
A	H1
B	H2
C	Hydraulic gripper
D	Hydraulic thumb

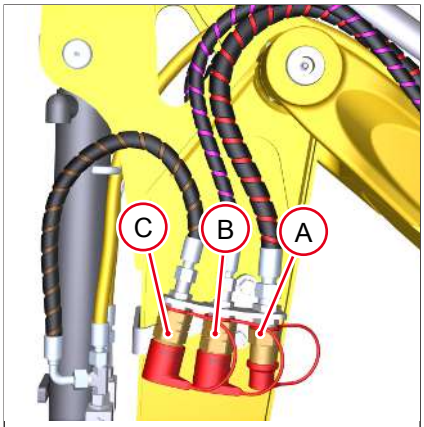

Fig. 169: Auxiliary control circuit left

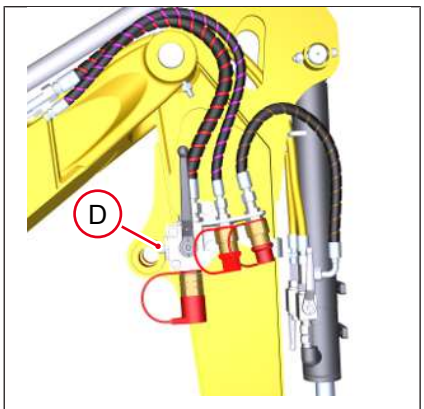

Fig. 170: Hydraulic thumb right

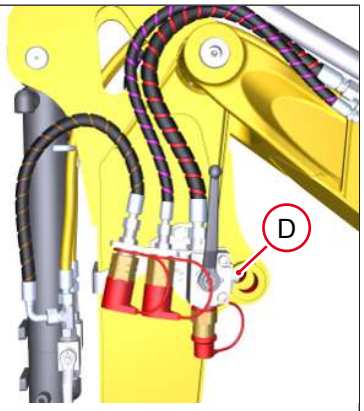

Fig. 171: Hydraulic thumb left

Information

Before connecting and disconnecting hydraulically actuated mounted attachments, read the operator's manual of the mounted attachment.

6.10.2 Reducing pressure in the hydraulic system

1. Deactivate the vehicle safely.
2. Lower the attachment completely onto the ground.
3. Lower the dozer blade to the ground.
4. Switch off the engine.
5. Switch on ignition.
6. Fold down the joystick base.
7. Move joysticks, controllers and pedals of the control circuit in all directions multiple times and keep them at the end stop for a few seconds.
   ⇨ The pressure is released. The hydraulic hoses move briefly.
8. Switch off the ignition.

Uncouple the attachment immediately afterwards, otherwise pressure may build up again.

Coupling and uncoupling hydraulic connections

1. Park the vehicle.
2. Switch on ignition.
3. Release pressure in the hydraulic system.
4. Remove the starting key and store it in a safe place.

⇨ The attachment can now be coupled or uncoupled.

Do not store discarded attachments in the sun to prevent pressure from building up in the lines.

Clean hydraulic quick couplers before connecting them to prevent dirt from entering the hydraulic system.

6.10.2.1 Relieve the pressure in the auxiliary control circuits

Release pressure with proportional control

1. Deactivate the vehicle safely.
2. Lower the attachment completely onto the ground.
3. Turn the oil flow from H1 and H2 to **MAX**.
4. Switch off the engine.
5. Switch on ignition.
6. Joystick base is folded down
   ⇨ Ensure that H1 is activated.
7. Move the controls on both joysticks to the left and right.
8. The pressure in the control circuits H 1 and H 2 is released. The hydraulic hoses move briefly.

Uncouple the attachment immediately afterwards, otherwise pressure may build up again.

6.10.3 H1

The operation is performed with the left joystick.

Select function **H1** with the button.



Fig. 172: Operation H1

Oil flow	Operation
To the left line	Controller to the left
To the right line	Controller to the right



Fig. 173: Display **swivel boom**

If the function **swiveling boom** is selected, the symbol appears in the display.

6.10.3.1 Hammer operation



⚠ WARNING

Risk of piercing by objects from the front!

When working where there is a risk of piercing through objects from the front, accidents with serious injuries or death may occur.

- ► In areas where there is a risk of being pierced by fragments whirled up from the front, the front window must be closed in case of the cab version.
- ► The vehicle operator must assess the hazardous situation and comply with national and regional regulations.
- ► The vehicle operator must ensure the protective structure is sufficient for the work.
- ► Observe the prescribed work area .



⚠ WARNING

Risk of injury due to the vehicle tipping over!

A tipping vehicle can cause serious injury or death.

- ► Do not suddenly turn, lower or park the attachment.
- ► Do not suddenly extend or retract the boom system.
- ► Only hammer when the vehicle is stationary.



Information

Only use the smallest released hydraulic hammer in combination with Powertilt.



NOTICE

Damage caused by improper operation of a hydraulic hammer

- ► Observe the operator's manual of the hydraulic hammer.
- ► Do not hammer horizontally or upwards.
- ► Do not lift loads with the hammer.
- ► Do not swing the hammer against stones, concrete etc.
- ► Do not hammer continuously in the same spot for more than 15 seconds.
- ► Do not lift the vehicle with the boom system.
- ► Do not operate with fully extended cylinders or boom system. Do not swing the Powertilt over 30° when hammering, otherwise the boom system will be heavily loaded.
- ► Stop working immediately if a hydraulic hose moves conspicuously back and forth. The pressure accumulator could be defective. Contact an authorized service center.
- ► Do not use the impact force of the boom system to work.

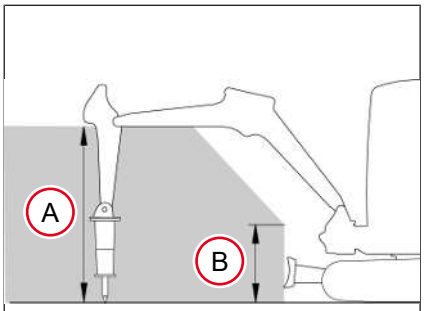

Fig. 174: Work area

Work area	Height in mm (in)
A	1200 (47)
B	500 (20)

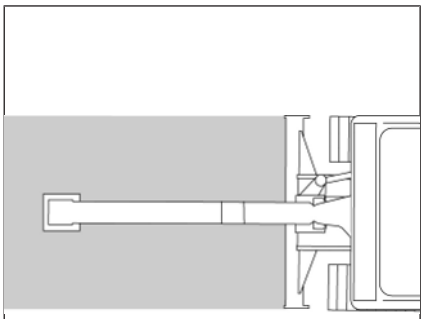

Fig. 175: Work area

Information

The work area refers to a Wacker Neuson hydraulic breaker.

The work area may differ for other mounted attachments.

NOTICE

Damage caused by an incorrect setting.

► The hammer operation is only possible via **H1**.

Return line

The lever for switching between the hammer operation and excavator operation is located under the maintenance cover 2.

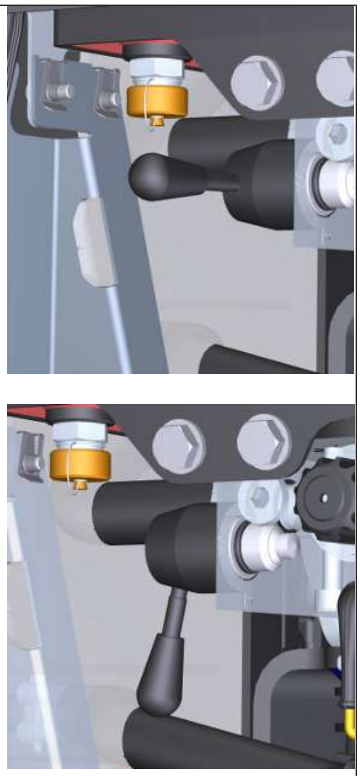

Fig. 176: Hammer operation/excavator operation

Function	Position
Hammer operation	1
Excavator operation	2



Fig. 177: Hammer operation monitoring

Hammer operation	Operation
On	Press and hold button on the back of the left joystick
Off	Release the button.

6.10.3.2 Hydraulic thumb

NOTICE

Damage caused by an incorrect setting.

► Before starting work check the position of notch **C**.

Information

The levers must be removed before operation.

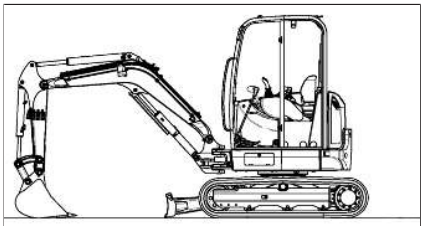

Fig. 178: Parking the vehicle

Switching takes place on the left and right at the end of the dipper stick.

Align the boom system straight.

Lower the boom system and dozer blade to the ground.

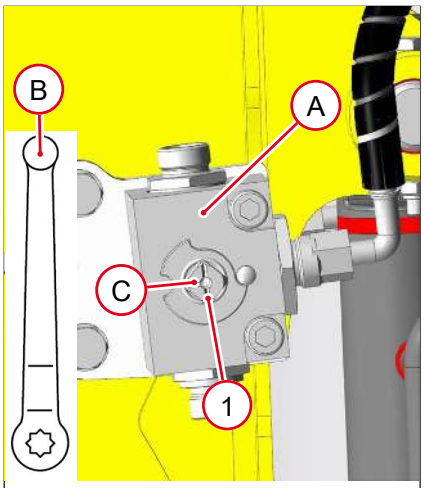

Fig. 179: H1

Adjust hydraulic thumb

The operation is performed with the left joystick.

Move ball valve **A** to the desired position with lever **B** on the left and right of the dipper stick.

Operation	Position notch C
H1	1
hydraulic thumb	2

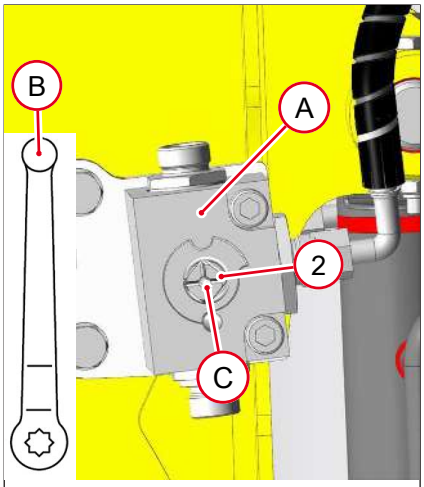

Fig. 180: Hydraulic thumb

6.10.4 H2



Fig. 181: Operation H2

The right joystick is used for operation.

Select function **H2** with the button.

Oil flow	Operation
To the left line	Controller to the left
To the right line	Controller to the right

Powertilt



⚠ WARNING

Crushing hazard due to rotating movements of the Powertilt

The rotating movement of the Powertilt can lead to serious injury or death.

► No one may be in the danger zone.



Information

Assembly and disassembly of the Powertilt may only be carried out by an authorized service center.

The right joystick is used for operation.



Fig. 182: Powertilt operation

For more information, see the operator's manual for attachments.

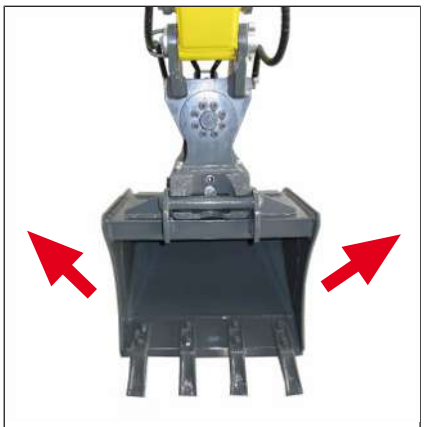

Fig. 183: Rotate bucket

Powertilt[1)]	Operation
Steer to the right	Controller to the left
Steer to the left	Controller to the right

1) The direction of rotation may differ depending on the system used or the valid standard.

6.10.5 Q1 (Hydraulic power coupler system)

Complete a training course before putting into operation. The training must be carried out by authorized technically trained personnel and must be understood by the operator.

- For safety reasons, the power coupler unit must be operated with two control elements. This prevents the power coupler from being opened unintentionally.
- The power coupler and the attachment console must be undamaged and clean.
- For more information, see the operator's manual for **attachments**.
- Keep the operator's manual for **attachments** together with the operator's manual for the vehicle.

6.10.5.1 Hydraulic power coupler preparation

The hydraulic power coupler preparation is an auxiliary hydraulic control circuit mounted on the boom system of the vehicle, which has been developed and approved for the hydraulic power couplers described in this operator's manual.

Wacker Neuson is not liable for injury or damage to property if at least one of the following points is not complied with:

- Observe the operator's manual for the hydraulic power coupler.
- Keep the operator's manual of the hydraulic power coupler together with the operating manual of the vehicle.
- If the power coupler is not approved, there may be differences in the operating functions or operation of the vehicle - Observe the operator's manual for the power coupler or attachment.

If a non-approved hydraulic power coupler is nevertheless used, the following points must also be observed:

- If necessary, modifications must be made to the vehicle (e.g. additional labels) or to the operator's manual of the vehicle (e.g. in the case of a different operation).
- The intended use of the vehicle may be restricted.
- The installation of a hydraulic power coupler that does not match the vehicle or its interface (e.g. pressure settings) may render the vehicle's declaration of conformity invalid.
  Contact an authorized service center.
- The installation of a hydraulic power coupler on a vehicle that does not match the hydraulic power coupler or its interface (e.g. pressure settings) may invalidate the declaration of conformity of the hydraulic power coupler.
  Contact an authorized service center.

6.10.5.2 Picking up the attachment



⚠ WARNING

Crushing hazard when picking up attachments!

An attachment that is not properly locked can become loose and cause serious injury or death.

- ► No one may be in the danger zone.
- ► Only use undamaged attachments and power couplers.
- ► The control pin must be completely retracted.
- ► Before starting work and after each locking procedure, press the attachment down to the ground. Then lift the attachment slightly and turn it in and out several times completely and quickly. The attachment must not detach from the power coupler.
- ► Only operate the vehicle with a securely locked attachment.

Operation with two buttons

Information

When excessive time elapses between pressing the **A** button and the **B** button, the process must be restarted.

► Press buttons **A** and **B** in a shorter interval.

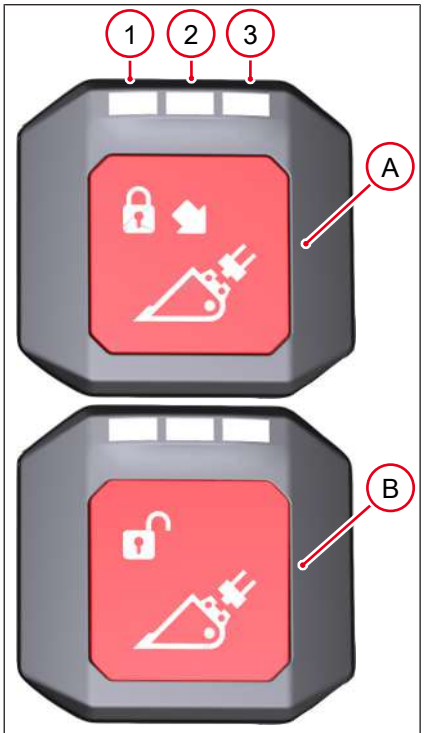

Fig. 184: Hydraulic power coupler button

Activate power coupler

- Hold button **A** pressed.
  - ⇨ LEDs **1**, **2** and **3** on the **A** button light up blue



Fig. 185: Hydraulic power coupler activated

- ⇨ The **hydraulic power coupler activated** symbol appears and the warning buzzer sounds.
- ⇨ LED **1** on the **A** button and the **B** button light up green.

6



Fig. 186: Hydraulic power coupler open

Open power coupler

- Press button **C**.
  - ⇨ The symbol **Hydraulic power coupler open** appears.
  - ⇨ LED **1** on the **A** button light up green.
  - ⇨ 3 LEDs on the **B** button flash red.
  - ⇨ Power coupler opens.

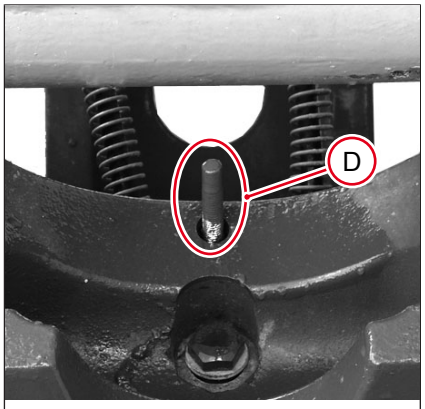

Fig. 187: Control device extended

Control device **D** must be fully extended.

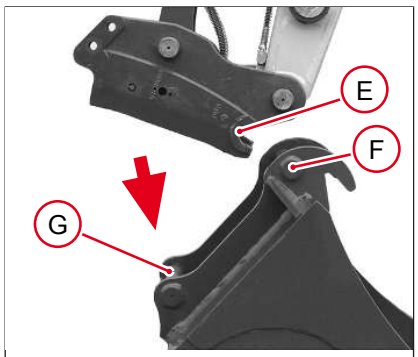

Fig. 188: Picking up the attachment

Picking up the attachment

1. Hook power coupler **E** into bolt **F** of the attachment.
2. Extend the bucket cylinder until attachment pin **G** rests on the power coupler.
3. Screw in the attachment completely.

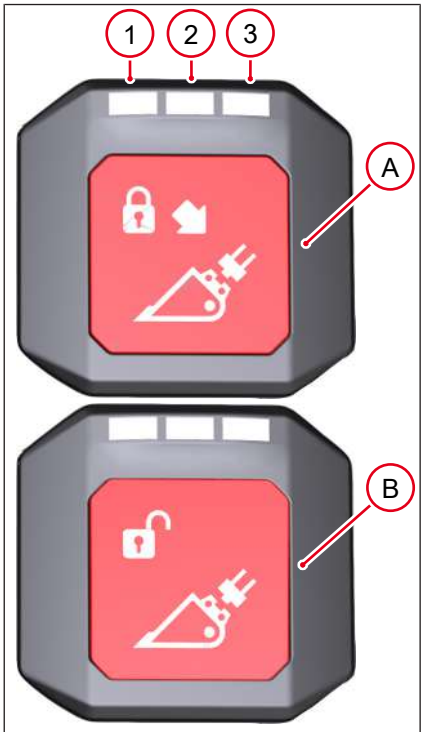

Fig. 189: Hydraulic power coupler button

Close power coupler

- Press button **A**.
  - ⇨ The symbol **Hydraulic power coupler closed** appears.
  - ⇨ 3 LEDs on the **A** button flash green.
  - ⇨ 3 LEDs on the **B** button light up red.


Fig. 190: Hydraulic power coupler closed

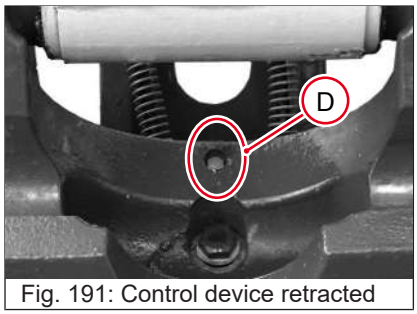

Fig. 191: Control device retracted

Control device **D** must be fully retracted.



Fig. 192: Bolt locking

Manual locking

Depending on national regulations, the hydraulic power coupler must also be locked manually after the hydraulic locking process.

The locking or unlocking device is located on the left side of the power coupler.

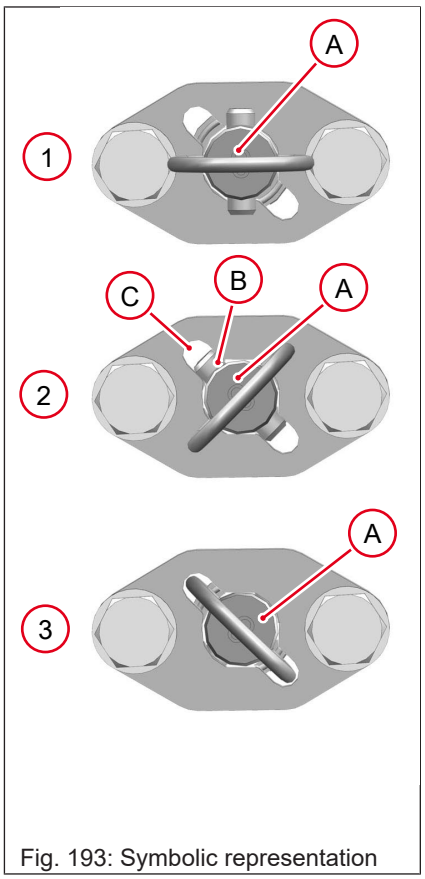

Fig. 193: Symbolic representation

1. Switch off the engine, remove the starting key and store it.
2. Fold up the joystick base.
3. Turn bolt **A** until bolt **B** fits into recess **C (2).**
4. Push in bolt **A** and turn it until it is held in position by the spring **(3).**

⇨ The hydraulic power coupler is additionally locked manually.

Information

The end positions of the bolts may differ from the illustrations.

Information

Observe national and regional regulations.

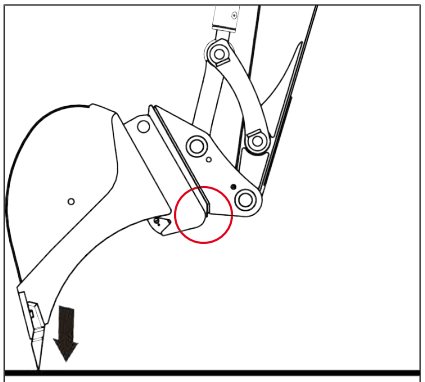

Fig. 194: Press in the attachment

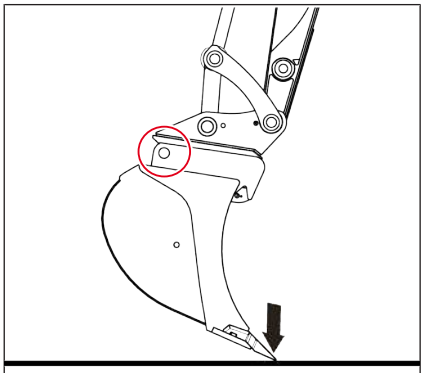

Fig. 195: Check lock

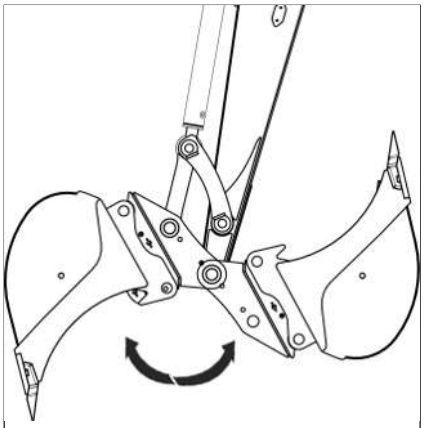

Fig. 196: Move the attachment

Check lock

Before starting work and after each locking procedure, press the attachment down to the ground. Then lift the attachment slightly and quickly screw it in and out completely several times.

The attachment must not detach from the power coupler.



Fig. 197: Power coupler with safety claw

Power coupler with safety claw

The safety claw prevents the attachment from falling down when the power coupler is not properly closed.

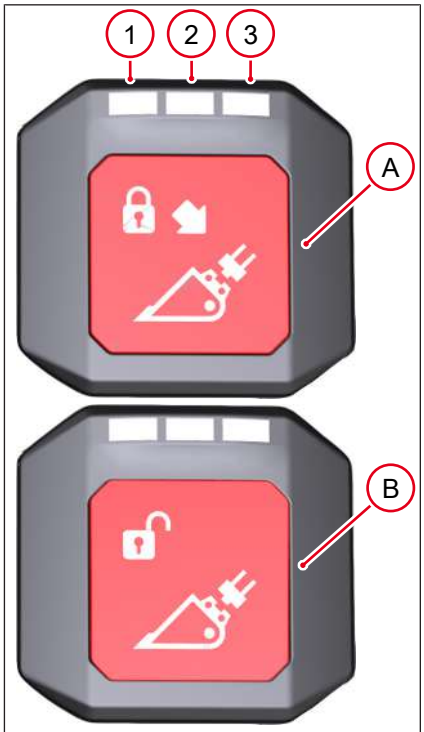

Fig. 198: Hydraulic power coupler button

- Press button **A** again to confirm.
  - ⇨ 3 LEDs on the **A** button and the **B** button light up green
  - ⇨ The power coupler closes and the warning buzzer turns off.

6.10.5.3 Put down the attachment



⚠ WARNING

Crushing hazard when putting down attachments!

An incorrectly locked attachment can tip over and cause serious injury or death.

- ► No one may be in the danger zone.
- ► Place the attachment securely on level and firm ground.

Operation with two buttons

Lowering the attachment.

Screw in the attachment completely and position it 5-10 cm (2-4 in) above the ground.



Fig. 199: Bolt locking

Manual unlocking

Depending on national regulations, the hydraulic power coupler must also be unlocked manually before the hydraulic unlocking process.

The locking or unlocking device is located on the left side of the power coupler.

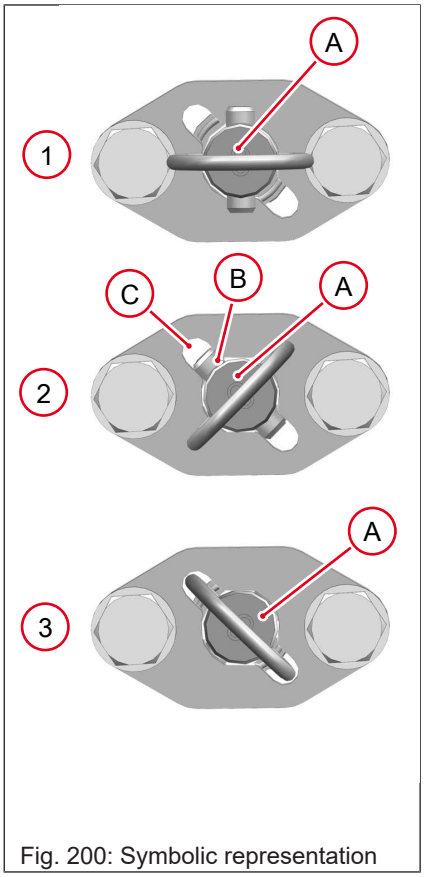

Fig. 200: Symbolic representation

1. Switch off the engine, remove the starting key and store it.
2. Fold up the joystick base.
3. Press bolt **A** in and turn until bolt **B** fits into recess **C (2).**
4. Pull out bolt **A (1).**

⇨ The hydraulic power coupler is unlocked manually. The attachment is still hydraulically locked.

6

Information

The end positions of the bolts may differ from the illustrations.

Information

Observe national and regional regulations.

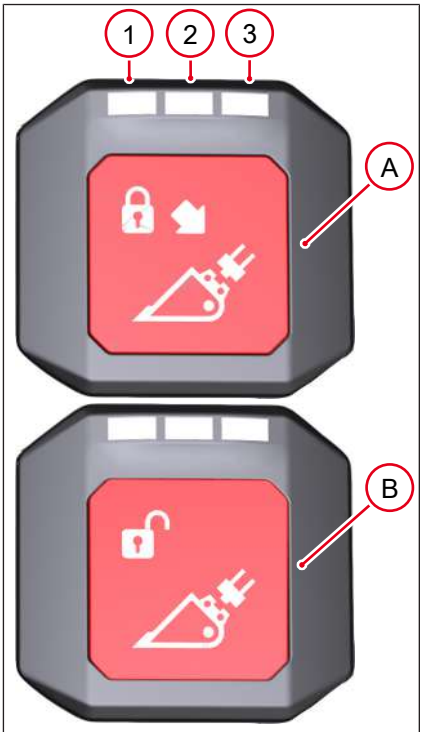

Fig. 201: Hydraulic power coupler button

Activate power coupler

- Hold button **A** pressed.
  - ⇨ LEDs **1**, **2** and **3** on the **A** button light up blue



Fig. 202: Hydraulic power coupler activated

- ⇨ The **hydraulic power coupler activated** symbol appears and the warning buzzer sounds.
- ⇨ LED **1** on the **A** button and the **B** button light up green.



Fig. 203: Hydraulic power coupler open

Open power coupler

- Press button **C**.
  - ⇨ The symbol **Hydraulic power coupler open** appears.
  - ⇨ LED **1** on the **A** button light up green.
  - ⇨ 3 LEDs on the **B** button flash red.
  - ⇨ Power coupler opens.

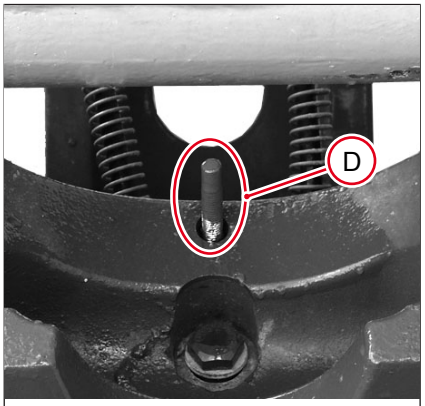

Fig. 204: Control device extended

Control device **D** must be fully extended.



Fig. 205: Put down the attachment

Put down the attachment

1. Retract the bucket cylinder.
2. Put down the attachment.
3. Raise the boom system.



Fig. 206: Deactivate the quick hitch system

4. Press switch **B** upwards.

⇨ The power coupler is deactivated and the warning buzzer turns off.

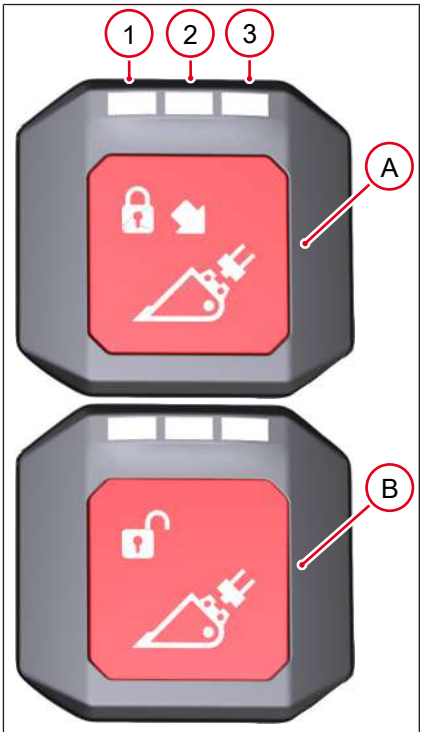

Fig. 207: Hydraulic power coupler button


Fig. 208: Hydraulic power coupler closed

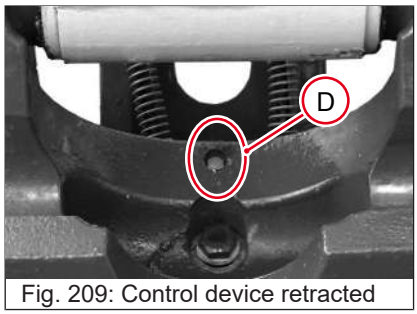

Fig. 209: Control device retracted

Close power coupler

- Press button **A**.
  - ⇨ The symbol **Hydraulic power coupler closed** appears.
  - ⇨ 3 LEDs on the **A** button flash green.
  - ⇨ 3 LEDs on the **B** button light up red.

Control device **D** must be fully retracted.

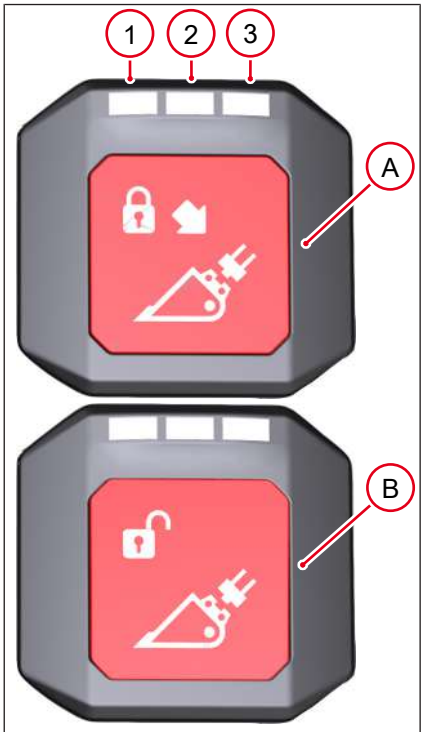

Fig. 210: Hydraulic power coupler button

- Press button **A** again to confirm.
  - ⇨ 3 LEDs on the **A** button and the **B** button light up green
  - ⇨ The power coupler closes and the warning buzzer turns off.

6.10.6 Gripper

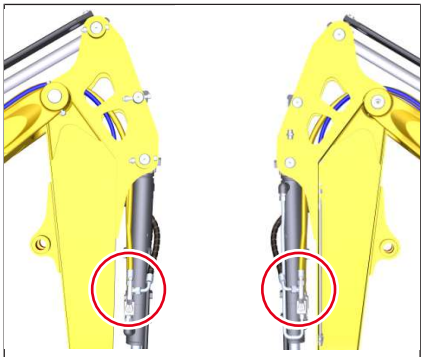
Fig. 211: Gripper

Switching takes place on the left and right of the dipper stick.

The notch symbolizes the direction of flow.

Position of gripper valve	Operating
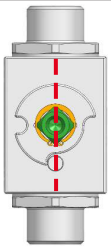	Excavator operation
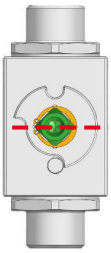	Gripper operation

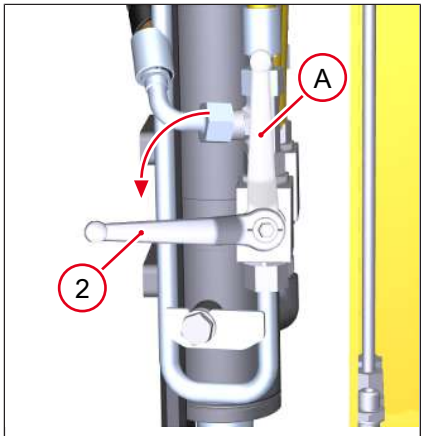

Fig. 212: Gripper operation

Set gripper operation:

- Bring both levers **A** at the ball valve into position **2**.

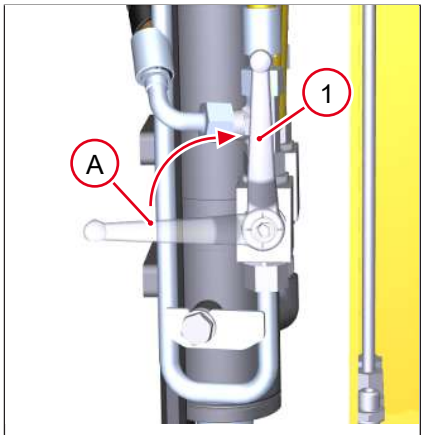

Fig. 213: Excavator operation

Stop excavator operation

- Bring both levers **A** at the ball valve into position **1**.

Information

The levers must be removed before operation.

6.10.7 Proportional control

Information

Exemplary representation for H1. Operation for H2 is identical.

With the proportional control it is possible to continuously adjust the oil flow for the attachment.



Fig. 214: Proportional control overview

Make settings

1. Press control knob **A**.
   ⇨ The last activated auxiliary control circuit flashes on the display and the oil flow will be shown.



Fig. 215: Auxiliary control circuit and oil flow display

2. Rotate the controller **A**
   ⇨ The oil flow will change.

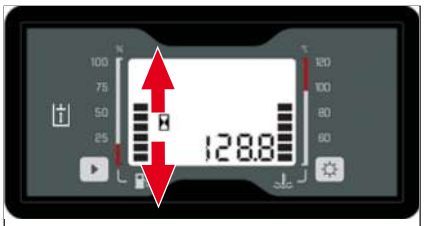

Fig. 216: Change oil flow display

3. Press control knob **A**.
   ⇨ Return to the previous menu item.

6.10.8 Mechanical power coupler

6.10.8.1 Lehnhoff

- The power coupler and the attachment console must be undamaged and clean.
- Keep the operator's manual of the mechanical power coupler together with the operating manual of the vehicle.
- The operation described does not apply to high buckets. Contact a service center authorized for high bucket operation.



⚠ WARNING

Crushing hazard when picking up attachments!

An attachment that is not properly locked can become loose and cause serious injury or death.

- ► Before locking or unlocking remove the starting key and keep it in a safe place.
- ► When locking or unlocking ensure that no body parts are crushed.
- ► Only use undamaged attachments and power couplers.
- ► Ensure that the danger zone of the vehicle is clear after locking.
- ► Before starting work and after each locking procedure, press the attachment down to the ground. Then lift the attachment slightly and turn it in and out several times completely and quickly. The attachment must not detach from the power coupler.
- ► Only operate the vehicle with a securely locked attachment.



⚠ WARNING

Crushing hazard when putting down attachments!

An attachment that has not been placed down correctly may tip over and cause serious injury or death.

- ► No one may be in the danger zone.
- ► Place the attachment on a horizontal, load-bearing and level surface so it cannot tip over.

Console

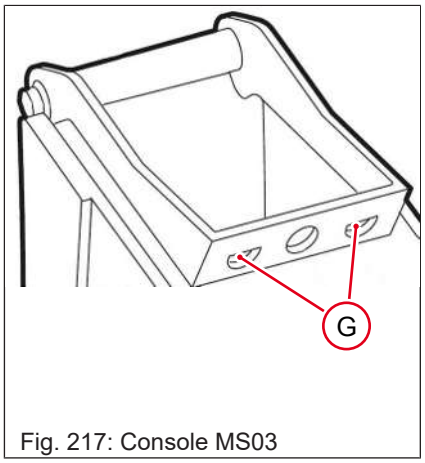

Fig. 217: Console MS03

MS03

G: Holes for quick change bolts

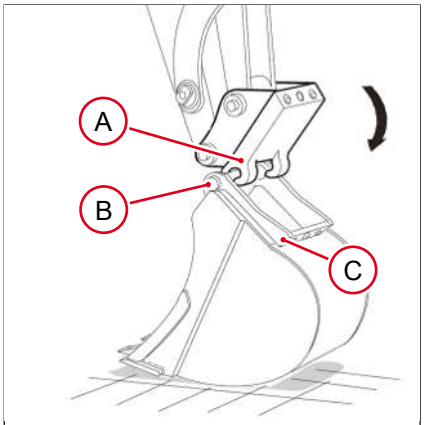

Fig. 218: Picking up the attachment

Picking up the attachment

1. Hook power coupler **A** into bolt **B**.
2. Screw in power coupler **A** slightly, lift the dipper stick until the attachment hangs approx. 30 cm (12 in) above the ground.
3. Extend the bucket cylinder so that edge **C** of the attachment rests on the power coupler.

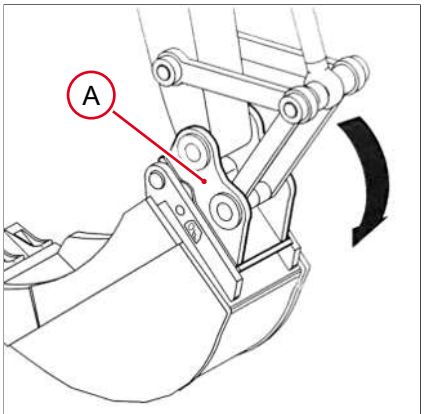

Fig. 219: Picking up the attachment

4. Screw in power coupler **A** until the weight of the attachment rests completely on power coupler **A**.
5. Switch off the engine and keep the starting key.

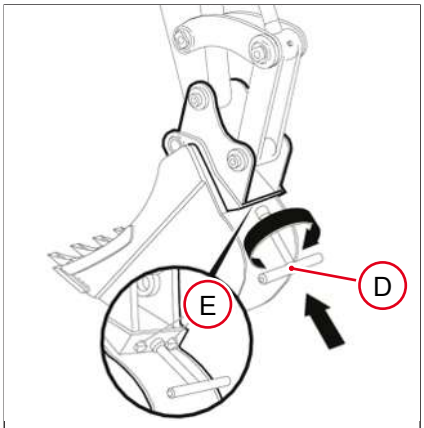

Fig. 220: Picking up the attachment

6. Turn key **D** clockwise until the bolts **E** completely engage in the openings **G** of the power coupler **A**.
   ⇨ The power coupler is locked.
7. Remove key **D**.
8. Perform a visual inspection.
9. Start the engine.

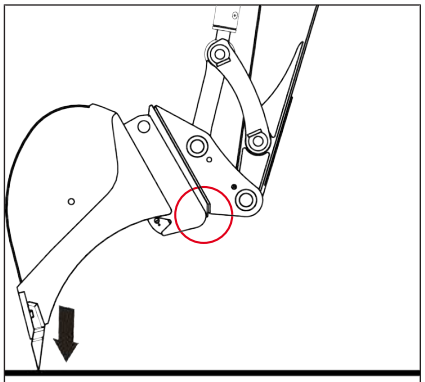

Fig. 221: Press in the attachment

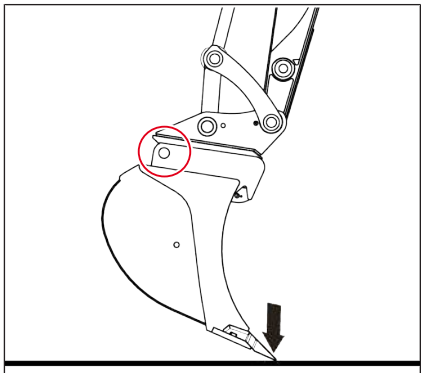

Fig. 222: Check lock

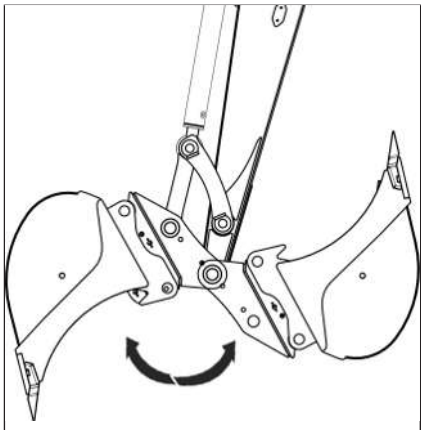

Fig. 223: Move the attachment

Check lock

Before starting work and after each locking procedure, press the attachment down to the ground. Then lift the attachment slightly and quickly screw it in and out completely several times.

The attachment must not detach from the power coupler.

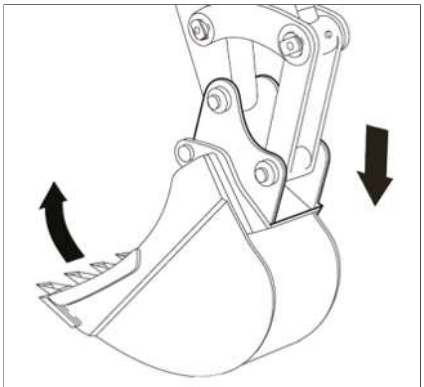

Fig. 224: Put down the attachment

Put down the attachment

1. Screw in the attachment completely and position it 5-10 cm (2-4 in) above the ground.
2. Switch off the engine and keep the starting key.

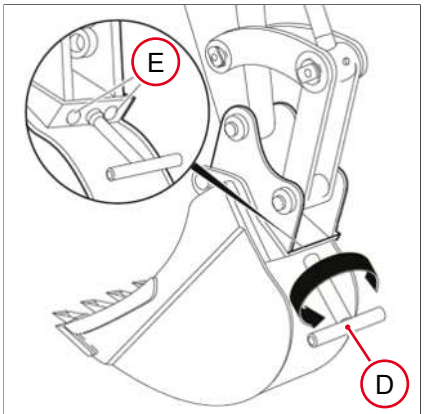

Fig. 225: Put down the attachment

3. Turn key **D** counterclockwise until the bolts **E** are completely retracted.
   ⇨ The power coupler is unlocked.
4. Remove key **D**.
5. Start the engine.
6. Set down the attachment securely on a horizontal, load-bearing and level surface.

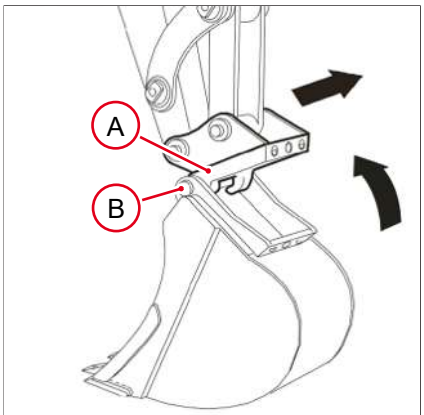

Fig. 226: Put down the attachment

7. Retract the bucket cylinder and release power coupler **A** from bolt **B**.

7 Transportation

7.1 Recovery



⚠ WARNING

Accident hazard due to improper recovery procedure!

An improper recovery operation can lead to accidents with serious injuries or death.

- ► Remove the vehicle from the immediate danger zone until it can be loaded.
- ► Only recover the vehicle using suitable recovery equipment in combination with suitable recovery devices such as hooks or lugs.
- ► When recovering, no persons may be between the vehicles. The lateral safety distance is 1.5 times the length of the recovery equipment.
- ► Do not recover a vehicle that is on a slope or is stuck. Contact the recovery company.
- ► Wear protective equipment.
- ► Slowly drive off and recover.



⚠ WARNING

Crushing hazard due to the vehicle rolling away after parking!

An unsecured vehicle can lead to serious injury or death.

- ► Lower the boom system and dozer blade to the ground.



NOTICE

Damage caused by improper recovery.

- ► Recover the vehicle until it can be loaded.
- ► The vehicle may only be recovered with the engine running and the drive system fully functional.
- ► Do not recover a vehicle that is on a hillside or stuck. Load the vehicle.
- ► Use sufficiently dimensioned recovery means and recovery equipment.
- ► The recovery vehicle must have at least the same weight class, a safe braking system and sufficient traction.



Information

The excavator must not be used to tow another vehicle on public roads. The excavator must also not be towed by another vehicle.

Information

Only have the vehicle repaired by an authorized specialist workshop after recovery.



Fig. 227: Recovery eye

1. Ensure that the vehicle can be safely recovered.
2. Mount the sling on the recovery eye.
3. Drive off slowly with the towing vehicle.
4. Remove the vehicle from the immediate danger zone until it can be loaded.

7.2 Loading

⚠ WARNING

Accident hazard due to improper loading process!

An improper loading process can lead to accidents with severe injuries or death.

- ► No one may be in the danger zone.
- ► Observe the transport weight on the vehicle type label.
- ► Only lash the vehicle to the described tie-down points.
- ► Observe the loading weight. Add the weight of retrofitted accessories to the vehicle weight.
- ► Only get off the transport vehicle with the help of a bystander.

- The transport vehicle must have sufficient lift capacity and loading space.
- The permissible total weight of the transport vehicle must not be exceeded.
- The permissible total weight must not be exceeded.
- Only use the attachment points provided on the vehicle and the loading area for lashing.
- The attachment points at the vehicle must not be damaged or impermissibly widened. In such a case, the vehicle must not be transported.
- No one must be in or on the vehicle during transportation.
- Pay attention to atmospheric weather conditions.
- Observe national and regional regulations.

7.2.1 Driving onto a transport vehicle

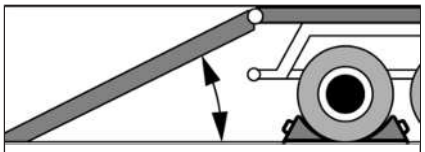

Fig. 228: Access ramp (symbolic representation)

1. Secure the transport vehicle against rolling away.
2. Use non-slip drive-on ramps with a maximum angle of inclination of 15°.
3. Ensure that there are no obstacles on the loading area and access road.
4. Start the engine.
5. Raise the boom system and supports so that the ramps are not touched.
6. Drive the vehicle onto the transport vehicle.
7. Align the boom system straight.
8. Lower the boom system and outriggers.
9. Switch off the engine.
10. Fold up the joystick base.
11. Stow loose objects.
12. Remove the starting key and store it in a safe place.
13. Exit the vehicle.
14. Close and lock doors, windows and covers.

7.2.2 Lifting eyes



NOTICE

Possible damage to the lifting eyes due to incorrect lifting gear.

► Only use hooks or shackles that are at least 20 mm (1 in) in diameter.

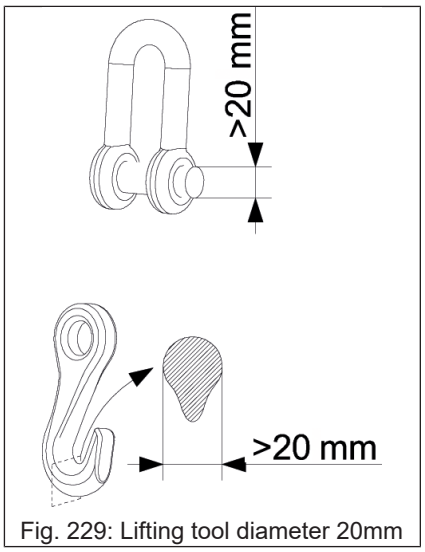

Fig. 229: Lifting tool diameter 20mm

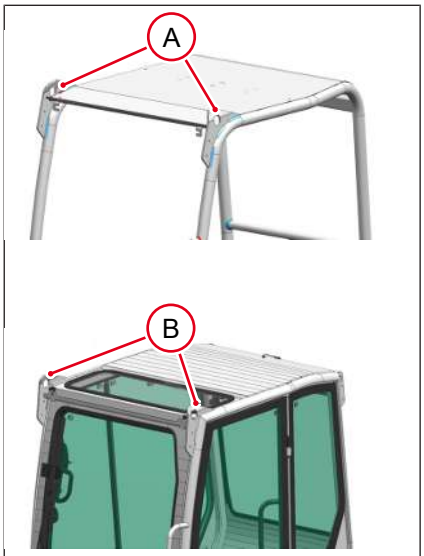

Fig. 230: Lifting eyes canopy and cab

Position	Designation	Quantity
A	Canopy	2
B	Cab	2

7.2.3 Crane-lifting



⚠ WARNING

Accident hazard due to improper loading!

Improper loading can lead to accidents with serious injuries or death.

- ► No one may be in the danger zone.
- ► Observe the transport weight on the vehicle type label.
- ► Lift the vehicle only with suitable slings.
- ► Observe the loading weight. Add the weight of retrofitted accessories to the vehicle weight.
- ► The vehicle may only be lifted by the lifting eyes described.



NOTICE

Damage caused by improper loading process

- ► Observe the transport weight on the vehicle type label.
- ► Only lift the vehicle with sufficiently dimensioned slings.
- ► Observe the loading weight. Add the weight of retrofitted accessories to the vehicle weight.

- Wear protective equipment when securing, guiding and releasing the vehicle.
- The vehicle must not be loaded with a crane if lifting eyes are damaged or impermissibly widened.
- The signalman must be within sight or sound of the crane operator. If the lifted vehicle moves abnormally, contact the crane operator immediately and interrupt the loading process.
- No one must be in or on the vehicle during the loading process.
- Do not lift a stuck vehicle. Contact towing company.

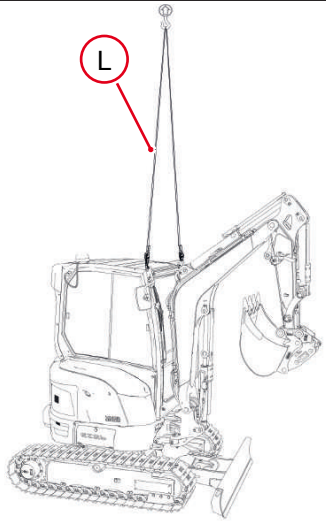

Fig. 231: Lifting gear

Length	Dimensions
L	1300 mm (51 in)

1. Empty the bucket.
2. Deactivate the vehicle safely.
3. Clean the vehicle.
4. Screw in the bucket.
5. Raise the boom completely.
6. Pull up the dipper stick.
7. The stabilizer blade must be at the front.
8. Raise the stabilizer blade completely.
9. Align the boom system straight.
10. Switch off the engine.
11. Fold up the joystick base.
12. Remove the starting key and store it in a safe place.
13. Stow loose objects.
14. Leave the vehicle, close and lock doors, windows and covers.
15. Attach slings to the lifting eyes.
16. Lift the vehicle and allow it to swing out.
17. Load the vehicle onto the transport vehicle.

7.3 Transport

1. Lash the vehicle to the lashing eyes with sufficiently dimensioned slings on the loading area.
2. In wet weather close the tailpipe.

The driver of the transport vehicle must know the following information before departure:

- Permissible total height, total width and total weight of the transport vehicle including excavator
- The legal requirements of the countries in which the transportation takes place

Observe national and regional regulations.

7.3.1 Lashing

7.3.1.1 Lashing points

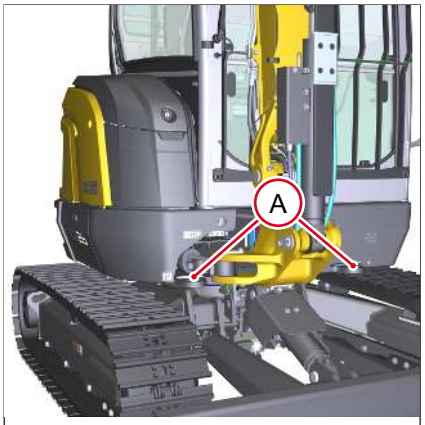

Fig. 232: Tie-down points undercarriage front

Item	Designation	Quantity
A	Undercarriage front	2
B	Undercarriage rear	2
C	Undercarriage rear (in addition to **A** and **B**)	2
D	Dozer blade (in addition to **A** and **B**)	2

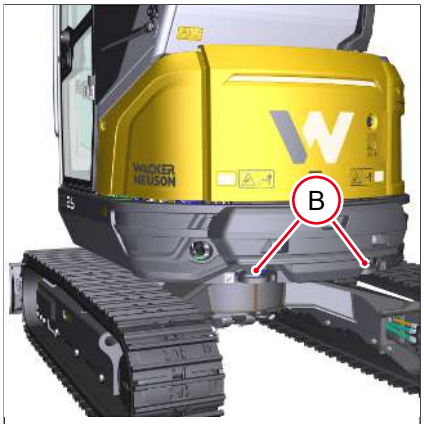

Fig. 233: Tie-down points undercarriage Rear

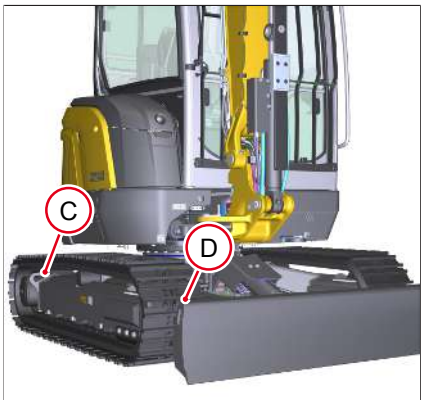

Fig. 234: Undercarriage and dozer blade tie-down points

7.3.1.2 Lashing specifications

Lashings must cross each other as shown in the **lashing** diagram. Note the lashing lengths.

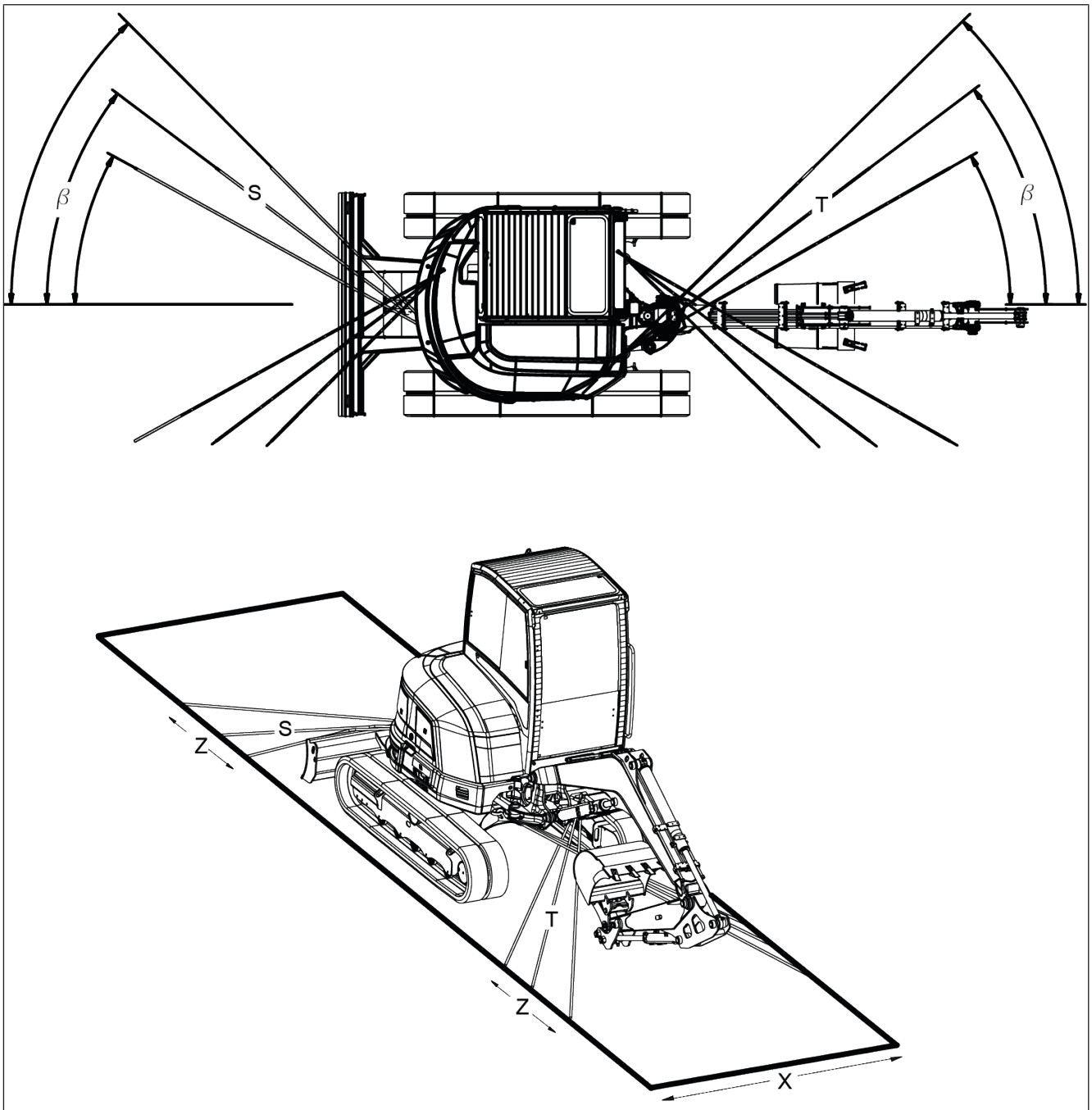

Fig. 235: Lashing (symbolic representation)

Vehicle	β[1]		X[2]	Z[3]	S		T	
	min.	max.			min.	max.	min.	max.
EZ26	29°	45°	2400 mm (95 in)	1200 mm (47 in)	2426 mm (96 in)	3024 mm (13'-9")	2244 mm (88 in)	3204 mm (10'-6")

1) Angle between lashing equipment and direction of travel

2) Maximum lateral distance between tie-down points on the loading area

3) Distance between the tie-down points on the loading area

8 Maintenance

8.1 Information on maintenance

- Maintenance described in this document has a significant impact on the functionality and service life of a vehicle.
- Have defective components repaired or replaced before putting the vehicle into operation. Safety-relevant parts may only be repaired or replaced by an authorized service center.
- Only use original spare parts for repairs.
- Comply with all warnings and safety instructions in this document.
- Wear protective equipment.
- Park the vehicle safely and secure it against rolling away.
- Remove the starting key and store it in a safe place.
- Allow surfaces to cool down prior to performing maintenance.
- Do not use vehicle components or attachments as climbing aids. Use only safe ascending aids.
- Proper care and maintenance is important for trouble-free operation and a long service life of the attachments. Observe the information on lubrication, maintenance and care in the corresponding operator's manual for the attachments.
- Have all eyelets and load hooks checked regularly by an authorized service center:
- Have load hooks with a defective spring mechanism replaced immediately by an authorized service center.

Preparation for maintenance

1. Deactivate the vehicle safely.
2. Align the boom system straight.
3. Lower the boom system and supports to the ground.
4. Switch off the engine.
5. Fold up the joystick base.
6. Attach a warning sign to the control elements (e.g. **vehicle is being serviced, do not start**).

8.2 Maintenance accesses



⚠ WARNING

Risk of injury from rotating parts!

Rotating parts can lead to serious injury or death.

► Remove the starting key and store it in a safe place.

► Open maintenance access only when the engine is switched off.

⚠ CAUTION

Burning hazard from hot surfaces!

May lead to injuries.

► Switch off the engine and let hot surfaces cool down.

► Wear protective equipment.

⚠ CAUTION

Risk of injury due to an open maintenance access!

May lead to injuries.

► Pay attention to injuries when the maintenance accesses are open.

The opening and closing of maintenance accesses is described below.

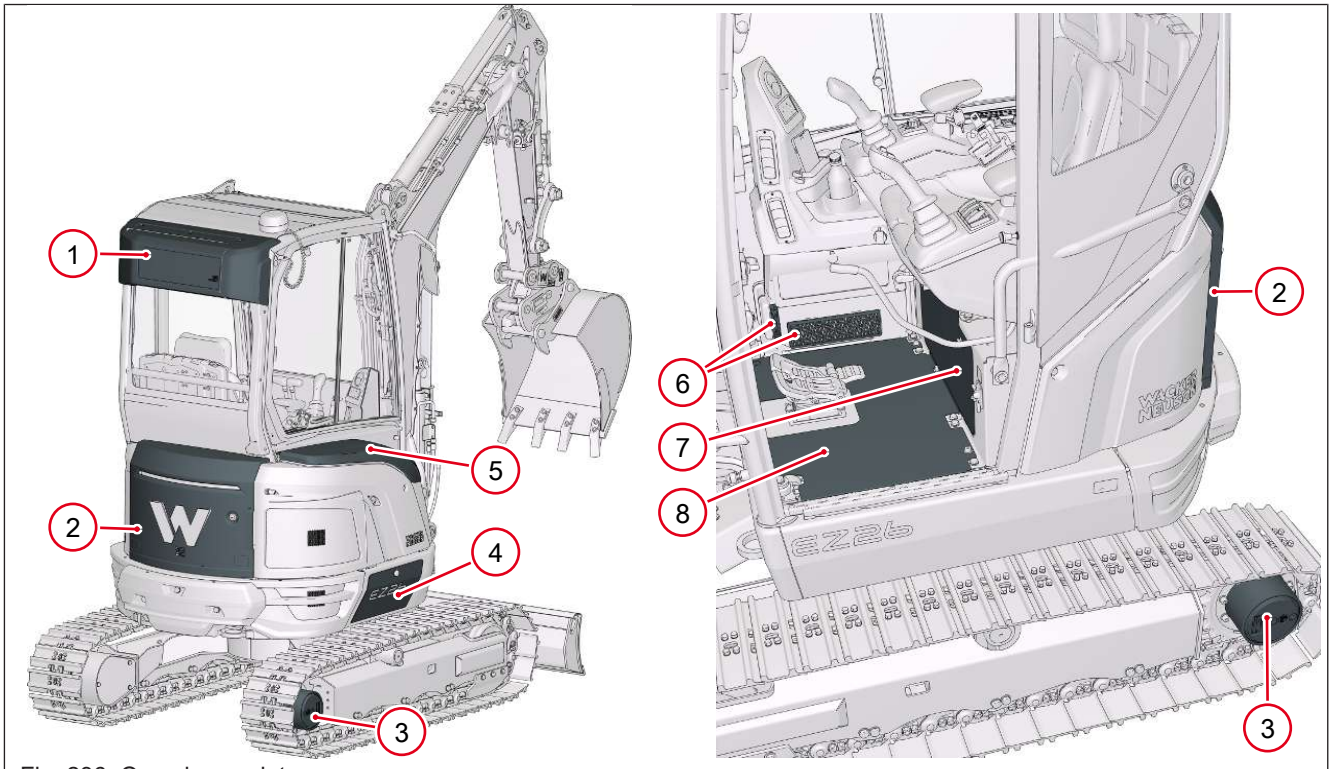

Fig. 236: Overview maintenance accesses

Item	Designation	Maintenance	Side
1	Maintenance cover 1	Only authorized service center	--
2	Engine hood	Engine oil level	[} 177]
		Air intake	[} 193]
		Air filter contamination indicator	[} 192]
		V-belt	[} 193]
3	Traveling drive	Only authorized service center	--
4	Maintenance cover 2	Water separator	[} 177]
		Hammer return line	[} 128]
5	Maintenance cover 3	Coolant	[} 179]
		Hydraulic oil	[} 172]
		Fuel	[} 174]

Item	Designation	Maintenance	Side
6	Cab air filter	Cab air filter	[} 162]
7	Fuse box	Jump start	[} 91]
		Fuse box	[} 211]
8	Base plate	Only authorized service center	--

8.2.1 Engine hood



⚠ WARNING

Risk of injury from a defective gas spring!

Defective gas pressure springs increase the effort required by the operator and can lead to serious injuries or death.

- ► Check the gas springs according to the maintenance plan.
- ► In the event of a defective gas spring, contact an authorized service center. Do not put the vehicle into operation.

Open



Fig. 237: Open the engine hood

1. Unlock lock.
2. Press lock and open the engine hood.
3. Lock the engine hood.

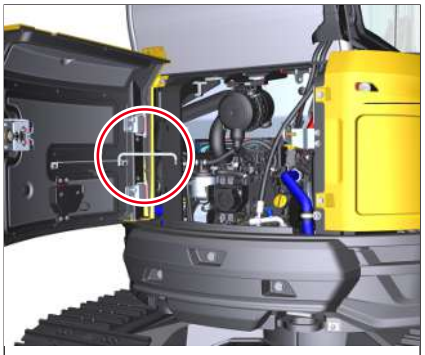

Fig. 238: Lock engine hood

8

8.2.2 Fuse box

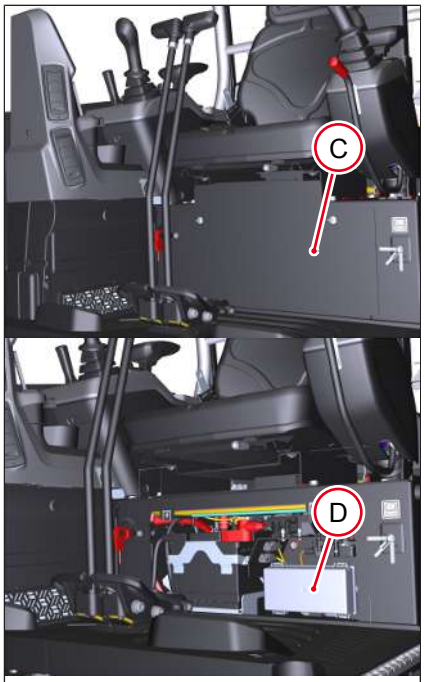

Fig. 239: Fuse box

The fuse box is located under the driver's seat.

Open

- Dismantle cover **C** and cover **D**.

Close

Install cover **D** and cover **C**.

8.2.3 Cab air filter

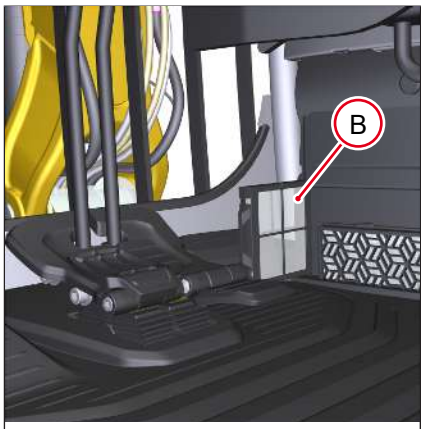

Fig. 240: Coarse filter

- Pull out, clean and replace coarse filter **B**. .



Fig. 241: Fine filter

- Clean the covering of fine filter **A**.

8.2.4 Maintenance cover 2



Fig. 242: Maintenance cover 2

Open

1. Unlock lock.
2. Open the maintenance cover.

Close

1. Close the maintenance cover.
2. Lock lock.

8.2.5 Maintenance cover 3


Fig. 243: Maintenance cover 3

Open

1. Unlock lock.
2. Open the maintenance cover.

Close

1. Close the maintenance cover.
2. Lock the lock.

8.3 Maintenance plan

8.3.1 Maintenance label

Maintenance work that must be carried out by the operator is indicated on the maintenance label.

I = Refill and drain operating material; check functions.

II = Check wearing parts, seals, hoses and screw connections.

III = Check for damage, rust and dirt.

IV = Lubricate daily at the end of work.

V = Lubricate weekly after work.

Superscript numbers, e.g. ^{2}: Number of lubrication points

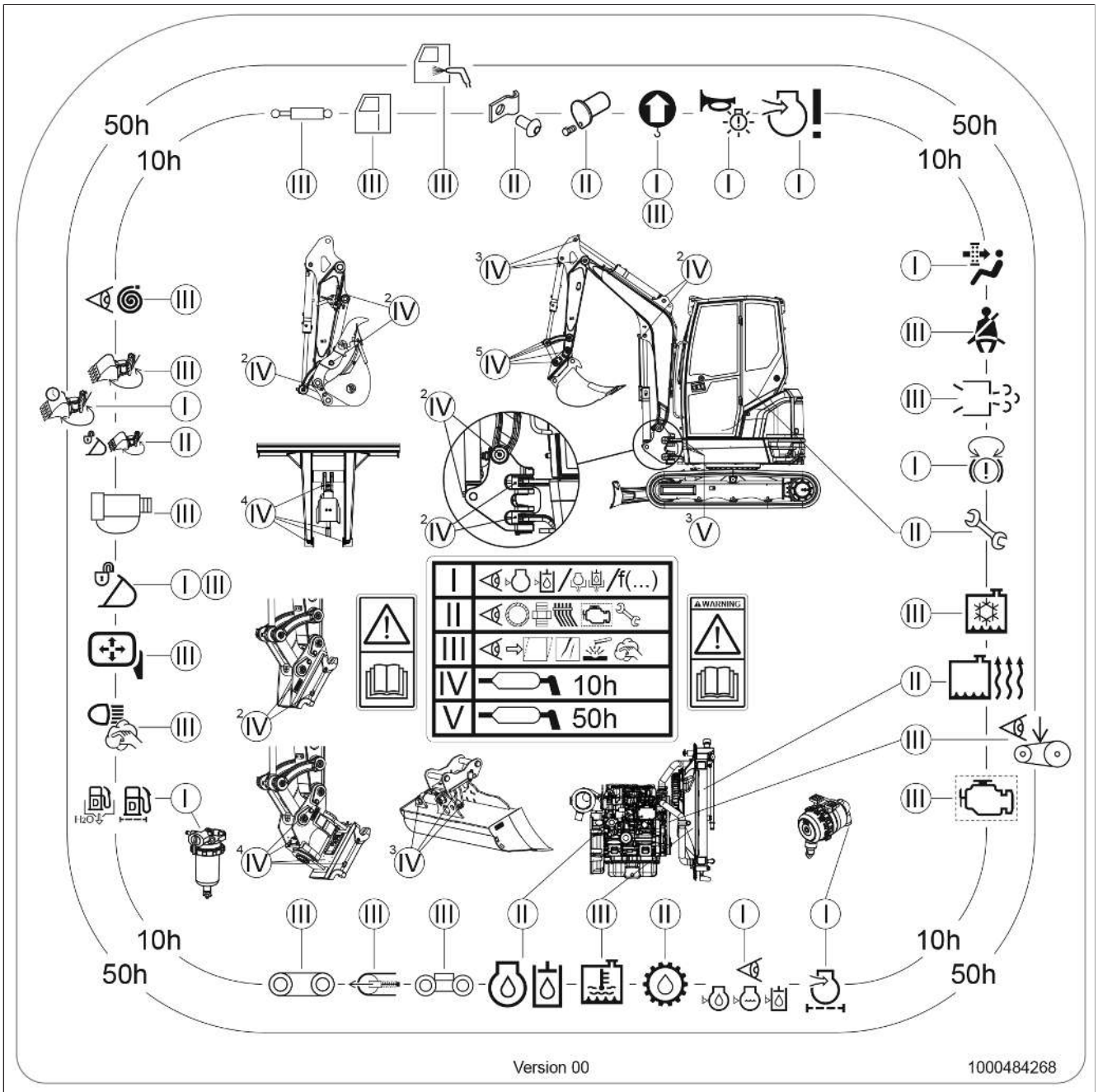

Fig. 244: Maintenance label

8.3.2 Daily maintenance

Daily maintenance (operator)		
Symbol	**Control and maintenance work**	**Side**
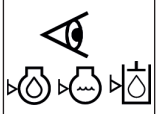	Check the vehicle fluids	[} 171]

Daily maintenance (operator)		
Symbol	**Control and maintenance work**	**Side**
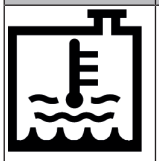	Check the radiator for contamination and clean if necessary	[} 194]
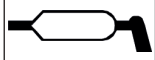	Lubricate vehicle according to lubrication plan	[} 181]
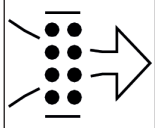	Check contamination indicator on the air filter	[} 192]
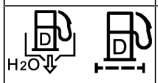	Empty water separator	[} 177]
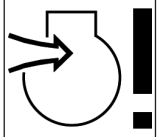	Check air intake	[} 193]
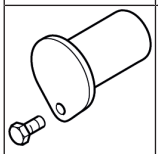	Check bolt safety devices	--
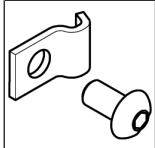	Check cable fixings	--
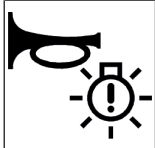	Check control lights and acoustic warning devices	[} 82] [} 104]
	Check screw connections of the protective structures for tightness	--
	Clean the lighting system and signaling equipment	--
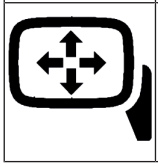	Adjust mirrors and camera system correctly, clean and check for damage, check fastening elements and tighten if necessary	[} 74]

8

Daily maintenance (operator)		
Symbol	**Control and maintenance work**	**Side**
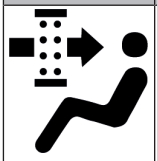	Check the cab air filter and clean the coarse filter, if necessary	--
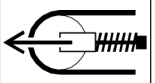	Check track tension and correct if necessary	[} 195]
	Check the slewing gear brake	[} 86]
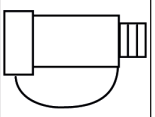	Check hydraulic couplings for contamination and clean, if necessary.	--
	Overload valve: check acoustic warning device	--
	Hydraulic quick hitch system (e.g. Easy Lock): check the acoustic warning device	--
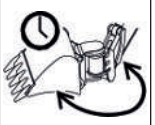	Lubricate Powertilt according to lubrication plan	--

Leakage check		
Check pipelines, hoses and screwed connections of the following assemblies for tightness, leaks and chafing; repair if necessary		
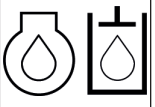	Engine and hydraulic system	--
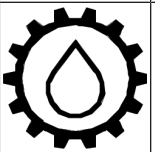	Traveling drive, axles and transfer case	--
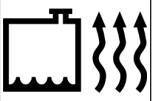	Cooling systems, heating and hoses (visual check)	--

Leakage check		
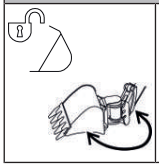	Hydraulic power coupler (e.g. Easy Lock) and Powertilt (hoses, valves)	--

Visual check		
Functionality, deformations, damages, surface cracks, wear and corrosion		
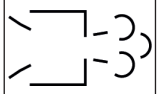	Check the exhaust system for damage	--
	Check insulation mats in the engine compartment for damage	--
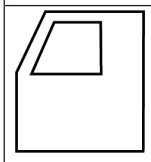	Check cab and protective structures for damage (e.g. Front Guard, FOPS)	--
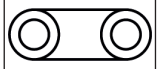	Check track tracks for damage	--
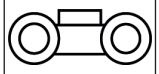	Check the undercarriage for damage	--
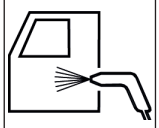	Check the ascent and descent for contamination and clean if necessary.	--
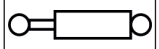	Check the piston rods of the cylinders for damage	--
	Check seat belt for damage and clean, if necessary	--
	Check load hook, joint rod and lifting eyes	--
	Check hydraulic hoses for damage	--

8

Visual check		
	Check hydraulic power coupler for damage	--
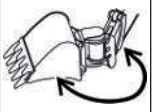	Check Powertilt for damage	--
--	Lubricate attachments not shown in this document according to the manufacturer's instructions.	--

8.3.3 Weekly maintenance

Weekly maintenance/every 50 operating hours (operator)		Side
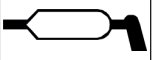	Lubricate vehicle according to lubrication plan	--
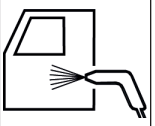	Check ascent and descent for contaminants	--
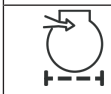	Check contamination indicator on air filter[1)]	--
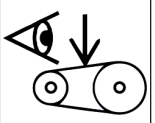	Check V-belts (engine and air conditioning) for condition and tension	[} 193]
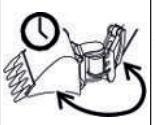	Operate the Powertilt swivel device in the end position for one minute in both flow directions to flush the system	--

1) Change air filter according to contamination indicator, at the latest every 1000 h/year. (In case of prolonged use in acidic air e.g. in acid production plants, steel, aluminum factories, chemical factories and other non-ferrous metal factories, change after 50 operating hours, irrespective of the contamination indicator; contact an authorized specialist workshop.)

8.3.4 Further maintenance intervals

Additional service intervals (authorized specialist workshop)

- Every 500 operating hours or annually

For detailed information, contact an authorized service center.

8.4 Vehicle fluids

Application	Vehicle fluid	Specification	Temperature	Filling quantities
Engine	Diesel[1]	ASTM D975 - 94: 2D S15 (USA)[2]	Summer diesel winter diesel	39.4 liters (10.4 gal)
		EN 590 (EU)[3]		
		BS 2869 - A1, A2 (GB) [3]		
		GB252 (China)[4]		
		ASTM D975 - 94: 2D S15 (USA)[5]		
	HVO	EN 15940 (EU)[6]	Summer HVO Winter HVO	
	Coolant[7]	Distilled or deionized water and ASTM D6210 antifreeze	all year round	5.7 liter (1.5 gal)
	Engine oil	API: CF, CF-4, CI-4 ACEA: E3, E4, E5 JASO: DH-1	[} 170]	4.4 liter (1.2 gal)[8]
Hydraulic oil tank	Hydraulic oil	Eurolub HVLP 46[9]	[} 170]	19.4 liters (5.1 gal)
	Bio-oil[10]	Panolin HLP Synth 46[11]		
Washer system	Window cleaner and antifreeze compound	--	all year round	1.2 liters (0.3 gal)
Lubrication point	Grease	KPF 2 K-20[12]ISO-L-X-BCEB 2[13]	all year round	as needed
Battery terminals	Acid protective grease[14]	FINA Marson L2	all year round	as needed
Joystick base	Fluid grease	Förch S401	all year round	as needed

1) The use of bio diesel is prohibited.

2) Sulfur content up to 15 ppm (0.0015%)

3) Sulfur content up to 10 ppm (0.001%)

4) Sulfur content up to 350 ppm (0.0350%)

5) Sulfur content up to 15 ppm (0.0015%)

6) Wacker Neuson recommends Class A HVO fuel. Owing to the higher cetane number, Class A HVO is better suited for lower outdoor temperatures and for operation at great heights.

7) Factory filling; Do not mix coolant - observe coolant mixing table; Contact an authorized service center.

8) System fillings including hoses and engine

9) In accordance with DIN 51524 Part 3, ISO-VG 46

10) Biodegradable hydraulic oil based on saturated synthetic esters with an iodine value <10, according to DIN 51524, Part 3, HVLP, HEES

11) DIN ISO 15380

12) According to DIN 51502, lithium-saponified grease.

13) According to DIN ISO 6743-9, lithium-saponified grease

14) Standard acid protective grease NGLI class 2

8.4.1 Hydraulic oil types

Viscosity	Outside temperature			
HVLP 46[1)]	min. °C	min. °F	max. °C	max. °F
ISO VG32	-20	-4	30	86
ISO VG46	-5	23	40	104
ISO VG68	5	41	50	122

1) According to DIN 51524 Part 3, ISO-VG 46

Change intervals

Change hydraulic oil and hydraulic oil filter depending on the proportion of hammer operation.

Share of hammer operation	Hydraulic oil	Hydraulic oil filter
20%	800 Bh	300 Bh
40%	400 Bh	
60%	300 Bh	100 Bh
More than 80%	200 Bh	

Operation with organic hydraulic oil

- Only use organic oils approved by Wacker Neuson.
- Only refill with the same organic oil. Place a clear notice on the hydraulic oil fill opening indicating the oil type currently used.
- If two different types of oil are mixed, the properties of one type may deteriorate.
- When changing the oil, ensure that the remaining amount complies with national and regional regulations. Observe the manufacturer's instructions.
- Do not refill with mineral oil. A mineral oil content of more than 2% of the system filling causes foaming problems and affects the biodegradability of the oil.
- The same change intervals for oil and filter apply for bio-oils as for mineral oils.
- The condensation water in the hydraulic oil tank must be drained off by an authorized service center before the cold season. The water content must not exceed 0.1 percent by weight.
- Also for bio-oils, all environmental protection instructions in this document apply.
- The change from mineral oil to bio-oil may only be carried out by an authorized service center.

8.4.2 Engine oil types

	Ambient temperature[1)]			
Viscosity	min. °C	min. °F	max. °C	max. °F
SAE 0W20	--	--	20	68
SAE 0W30	--	--	30	86
SAE 0W40	--	--	40	104
SAE 5W30	--	--	30	86

Viscosity	Ambient temperature[1)]			
	min. °C	min. °F	max. °C	max. °F
SAE 5W40	--	--	40	104
SAE 10W30	-20	-4	30	86
SAE 10W40	-20	-4	40	104
SAE 15W40	-15	5	40	104

1) The specified values are recommendations of the engine manufacturer.

8.4.3 Coolant compound table

Outside temperature[1)]	Distilled water	Antifreeze compound[2)]
Up to °C (°F)	Vol.-%	Vol.-%
-30 (-22)	50	50

1) Wacker Neuson recommends a mixing ratio of 1:1 even at higher outside temperatures. This protects the system from corrosion, cavitation and deposits.

2) Do not mix the coolant with other coolants.

8.5 Levels



⚠ WARNING

Danger of falling when refilling vehicle fluids!

Can cause serious injury or death.

- ► Only use safe climbing aids when refilling operating materials.
- ► Do not use vehicle components or attachments as climbing aids.



NOTICE

Damage from contaminated operating materials

- ► Make sure no dirt gets into the openings when checking and refilling operating materials.



Environment

Collect leaking vehicle fluids with a suitable container and dispose of them in an environmentally friendly manner.

8.5.1 Hydraulic oil



⚠ WARNING

Burning hazard from hot hydraulic oil!

Hot hydraulic oil can cause scalding to the skin and serious injury or death.

- ► Release pressure in the hydraulic system.
- ► Let the engine cool down.
- ► Wear protective equipment.



⚠ WARNING

Risk of injury due to fluid leakage under pressure!

Hydraulic oil escaping under pressure can penetrate the skin and cause serious injury or death.

- ► Do not operate the vehicle with leaking or damaged hydraulic components.
- ► Open the hydraulic oil tank carefully so that the pressure in the tank is released.
- ► Wear protective equipment. In case of contact with hydraulic oil, immediately rinse eyes with clean water and contact a doctor.
- ► Defective or leaking hydraulic lines and screw joints must be repaired immediately by an authorized service center. Locate hydraulic leaks with a piece of cardboard.
- ► Contact a doctor immediately, even with the smallest wounds. Hydraulic oil causes blood poisoning.



NOTICE

Damage to the hydraulic system due to an incorrect hydraulic oil level.

- ► Check the hydraulic oil level daily.



NOTICE

Damage caused by incorrect or contaminated hydraulic oil.

- ► Only use hydraulic oil according to the list of **vehicle fluids**.
- ► Fill hydraulic oil through a sieve.
- ► Cloudy hydraulic oil in the oil sight glass indicates water or air in the hydraulic system. Contact an authorized service center.
- ► Have contaminated hydraulic oil filters replaced by an authorized service center.

8.5.1.1 Check hydraulic oil level

The hydraulic oil must have a minimum temperature so that the hydraulic oil level can be correctly determined. The following measures ensure that the hydraulic oil is warm enough:

- Track excavator: work 15-30 minutes
- Mobile excavators: work or drive 15-30 minutes
- Wheel dumper: drive 15-30 minutes

The hydraulic oil level should then be between **MIN** and **MAX**, ideally in the middle of the inspection window.

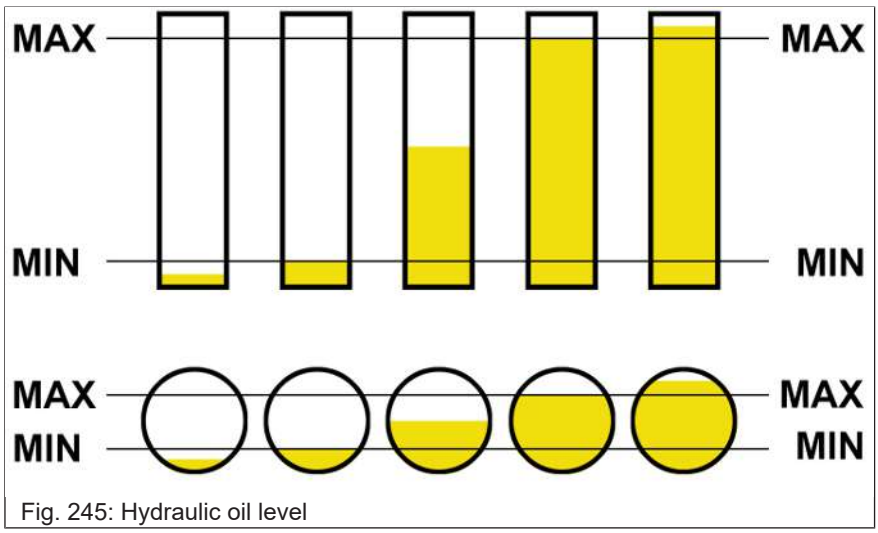

Fig. 245: Hydraulic oil level

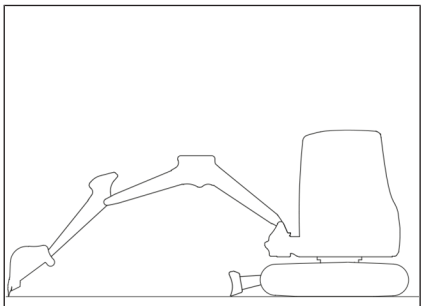

Fig. 246: Preparation Check hydraulic oil level

1. Deactivate the vehicle safely.
2. Align boom system as shown.
3. Lower the boom system and supports to the ground.
4. Switch off the engine.
5. Release pressure in the hydraulic system.
6. Remove the starting key and store it in a safe place.



Fig. 247: Checking hydraulic oil level

Check the oil level in the oil sight glass.

- Hydraulic oil level too low: refill hydraulic oil
- Hydraulic oil level too high: contact an authorized specialist workshop

8.5.1.2 Refill hydraulic oil


Fig. 248: Hydraulic oil fill opening

1. Release pressure in the hydraulic system.
2. Slowly open the ventilation filter so that the pressure in the hydraulic oil tank is reduced.
3. Remove the ventilation filter.
4. Add hydraulic oil.
5. Check the hydraulic oil level at the viewing window.
6. Close the hydraulic oil tank with the ventilation filter.

8.5.2 Fuel



⚠ WARNING

Explosion hazard due to fuel-air mixtures!

Fuels develop explosive and flammable fuel-air mixtures which can lead to severe burns or death.

- ► Fire, open flame and smoking are prohibited.
- ► Keep the maintenance area clean.
- ► Do not refuel in enclosed spaces.
- ► Do not mix gasoline with diesel fuel.
- ► Let the engine cool down.



⚠ WARNING

Fire hazard due to fuel!

Fuels form flammable vapors. This can lead to serious injuries or death.

- ► Fire, open flame and smoking are prohibited.
- ► Do not mix gasoline with diesel fuel.



⚠ CAUTION

Health hazard due to diesel!

Diesel and its vapors are harmful to health. This may result in personal injury.

- ► Avoid contact with the skin, eyes and mouth.
- ► In case of accidents with diesel, contact a doctor immediately.
- ► Wear protective equipment.



NOTICE

Damage caused by incorrect or contaminated fuel.

- ► Use only clean fuel according to the list of **vehicle fluids**.
- ► Only use additives approved by Wacker Neuson.
- ► Do not refuel from canisters to avoid contaminating the fuel.
- ► Maintain a distance of at least 15 cm (6 in) to the bottom of the barrel with the suction pipe.
- ► If possible, use fine filters.



Information

Fill up the tank after each working day. This prevents condensation from forming in the fuel tank.



Information

Do not run the fuel tank completely empty. Air is being sucked in and the fuel system must be vented.

8.5.2.1 Refueling with fuel dispenser



Fig. 249: Fuel filler opening

1. Deactivate the vehicle safely.
2. Switch off the engine.
3. Loosen the cover so that pressure in the fuel tank is released.
4. Remove the cover.
5. Refuel.
6. Close the filler opening.

8.5.2.2 Refueling from barrels

- Do not roll or tip barrels before refueling.
- Only use the filling aids with integrated fine filter, e.g. funnel or filler pipe.
- Keep all tanks clean for refueling.

8.5.2.3 Fuel filter

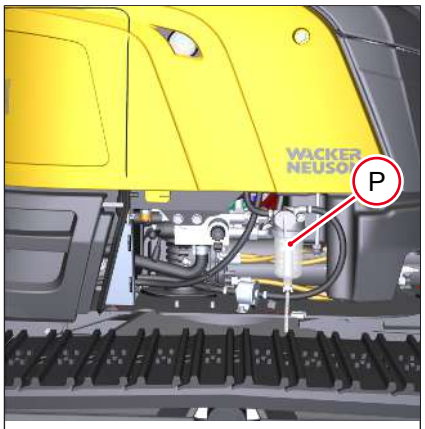

Fig. 250: Fuel pre-filter with water separator

Fuel pre-filter **P** with water separator is located under service cover 2. Main fuel filter **M** is located on the right in the engine compartment.

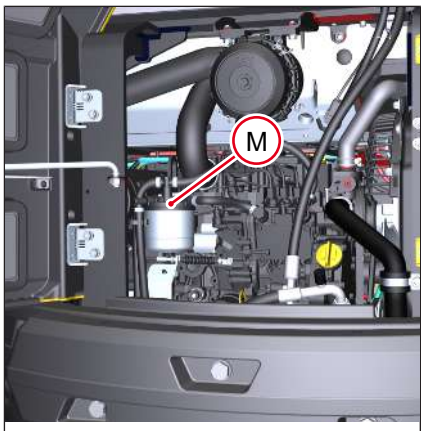

Fig. 251: Main fuel filter

8.5.2.4 Empty water separator

Information

When the indicator ring is no longer on the floor, empty the water separator.

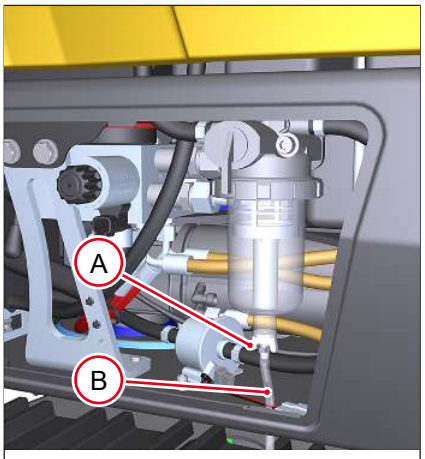

Fig. 252: Empty water separator

1. Position a container under the hose **B**.
2. Loosen valve **A**.
   ⇨ The fuel-water mixture runs into the container.
3. Tighten valve **A** when more fuel flows into the container.
4. Bleed the fuel system.

8.5.3 Motor oil

⚠ WARNING

Burning hazard from hot motor oil!

Hot engine oil can cause severe burns and death.

► Wear protective equipment.

► Let the engine cool down.

NOTICE

Damage due to incorrect engine oil level

► The oil level must be between the MIN and MAX mark.

NOTICE

Damage due to incorrect motor oil

► Only use motor oil according to the list of **operating materials**.

► The engine oil may only be changed by an authorized service center.

NOTICE

Damage caused by filling the engine oil too quickly

► Fill in engine oil slowly so that it can drain off and does not enter the intake system.

8.5.3.1 Checking the engine oil level

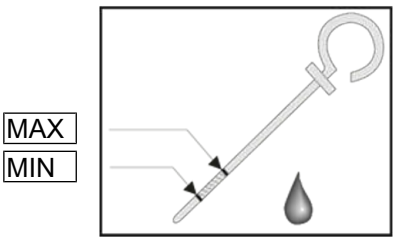

Fig. 253: Oil dipstick (symbol illustration)

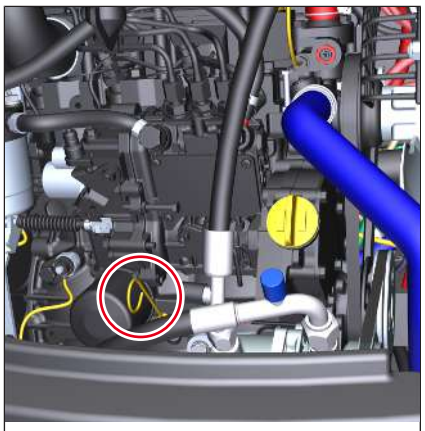

Fig. 254: Position of oil dipstick

1. Switch off the engine.
2. Wait ten minutes until the oil has completely drained into the oil pan.
3. Pull out oil dipstick and wipe with a lint-free cloth.
4. Push in oil dipper stick completely, then pull it out and read off the oil level.
   ⇨ The oil level must be between the **MIN** and **MAX** marks.
   ⇨ If necessary, refill motor oil.
5. Push in oil dipstick completely.

8.5.3.2 Refill engine oil

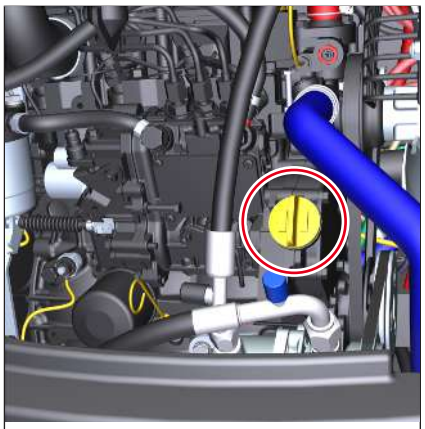

Fig. 255: Motor oil filler opening

1. Switch off the engine.
2. Wait ten minutes until the oil has completely drained into the oil pan.
3. Remove the cover.
4. Pull out the dipstick slightly to allow trapped air to escape.
5. Add motor oil.
6. Wait ten minutes.
7. Check the oil level.
   ⇨ If necessary, refill motor oil and check oil level.
8. Close the fill opening.
9. Push in oil dipstick completely.

8.5.4 Coolant



⚠ WARNING

Risk of poisoning by hazardous substances!

Contact with hazardous substances can lead to serious injury or death.

- ► Wear protective equipment.
- ► Do not inhale or swallow coolant.
- ► Avoid contact of coolant or antifreeze with skin and eyes.



⚠ WARNING

Risk of burns from coolant or antifreeze compound!

Coolant and antifreeze compound are highly flammable liquids that can cause severe burns or death if they come into contact with fire or open light.

- ► Wear protective equipment.
- ► Only carry out maintenance work when the engine has cooled down.
- ► Fire, open flame and smoking are prohibited.



⚠ WARNING

Risk of burns due to hot coolant!

The cooling system is hot, under high pressure and may cause burns or death upon skin contact.

- ► Wear protective equipment.
- ► Let the engine cool down.
- ► Open the radiator carefully.



NOTICE

Damage to engine caused by incorrect coolant or coolant level that is too low.

- ► Only use coolant according to the list of **vehicle fluids**.
- ► Check coolant level daily before starting engine.

8.5.4.1 Checking the coolant level



Fig. 256: Check the coolant level

1. Check the coolant level at oil sight glass.

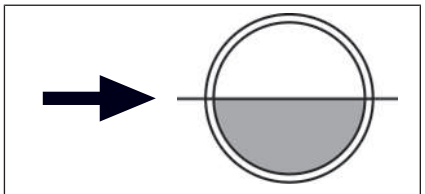

Fig. 257: Oil sight glass

2. If the coolant level is below the mark described, refill with coolant.

8.5.4.2 Refilling coolant



Fig. 258: Coolant filler opening

1. Let the engine and coolant cool down.
2. Slowly open the cover so that the pressure in the tank is reduced.
3. Remove the cover.
4. Refill coolant until the level is approximately in the middle of the oil sight glass.
5. Close the filler opening with the lid.
6. Start the engine and let it warm up.
7. Switch off the engine.
8. Let the engine and coolant cool down.
9. Check coolant level and refill coolant if necessary.

8.5.5 Washer system



⚠ CAUTION

Burning hazard from hot surfaces!

May lead to injuries.

- ► Switch off the engine and let hot surfaces cool down.
- ► Wear protective equipment.



Fig. 259: Washing water tank

1. Remove the cover.
2. Refill with windscreen cleaner if necessary.
3. Close the filler opening.

8.6 Lubricate vehicle and attachments

Information

Keep all lubrication points clean and remove any grease that has leaked.

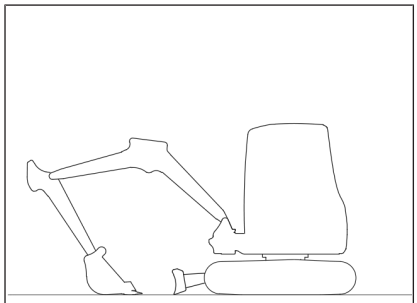

Fig. 260: Parking the vehicle

Preparation for lubrication

1. Deactivate the vehicle safely.
2. Align the boom system straight.
3. Lower the boom system and supports to the ground.
4. Switch off the engine.
5. Fold up the joystick base.
6. Remove the starting key and store it in a safe place.
7. Attach a warning sign to the controls (e.g. **vehicle is being serviced, not starting)**.

Wait at least ten minutes after switching off the engine.

8.6.1 Lubrication plan

8.6.1.1 Boom system

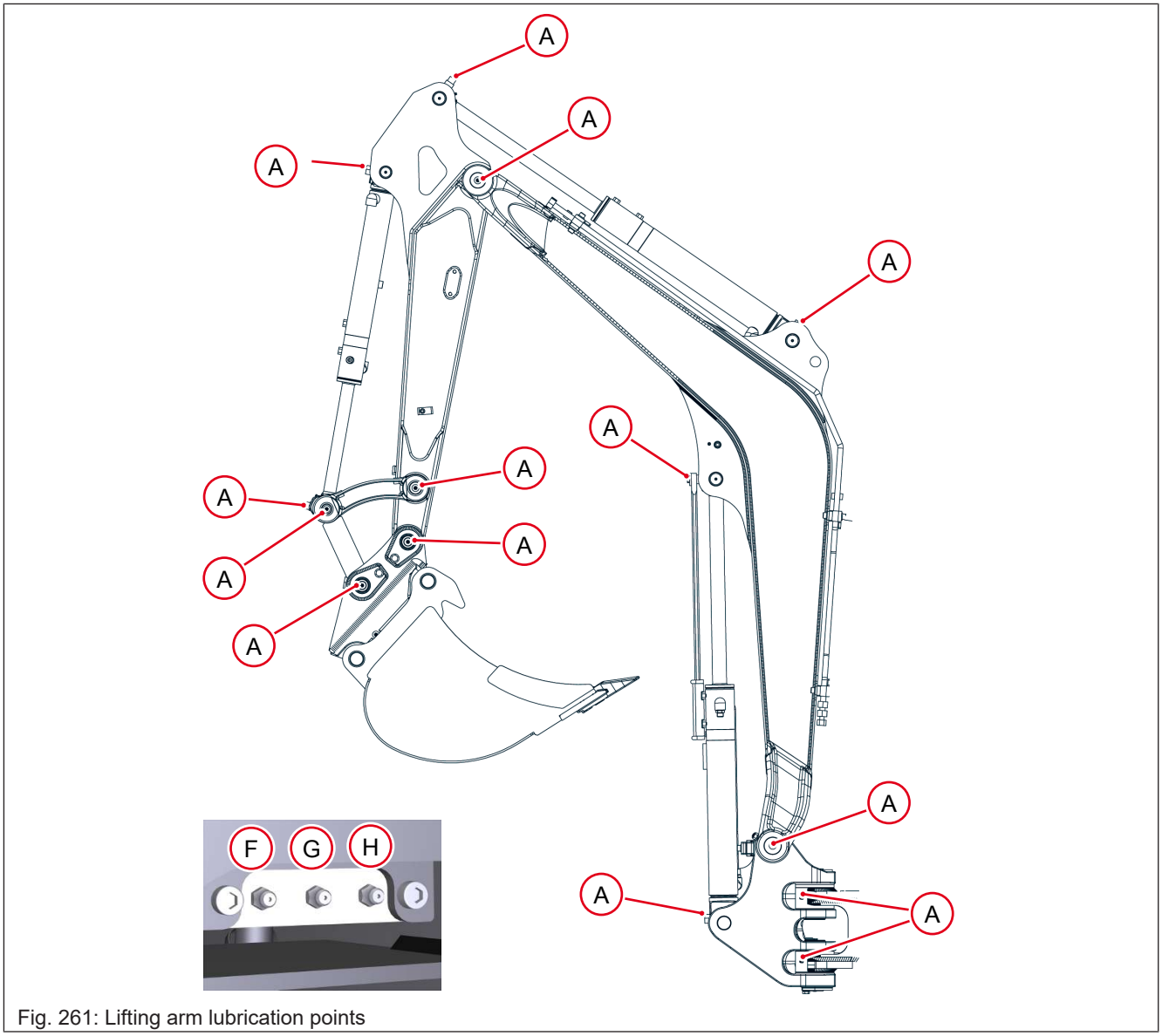

Fig. 261: Lifting arm lubrication points

Item	Lubrication point	Interval	Side
A	--	daily	--
F	Swivel cylinder	weekly	--
G	Slewing ring bearing track	weekly	[} 183]
H	Slewing ring gearing	weekly	[} 184]
Lubrication points are located on the bolts or directly on the cylinders.			

8.6.1.2 Outriggers

Dozer blade

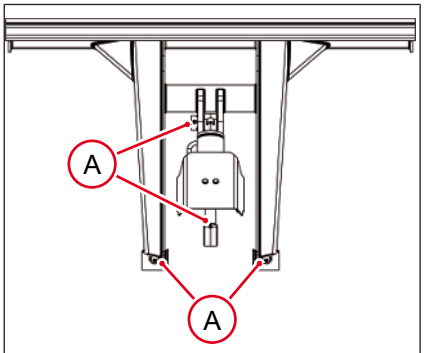

Fig. 262: Dozer blade lubrication points

Item	Lubrication point	Interval
A	Dozer blade	daily
Lubrication points are located on the bolts or directly on the cylinders.		

8.6.1.3 Slewing ring bearing track



⚠ WARNING

Crushing hazard during lubrication!

Can result in serious injury or death.

- ► While the upper carriage is being turned, make sure that no persons are in the danger zone.
- ► Do not tilt the upper carriage.

The lubrication points are located on the right side of the chassis.

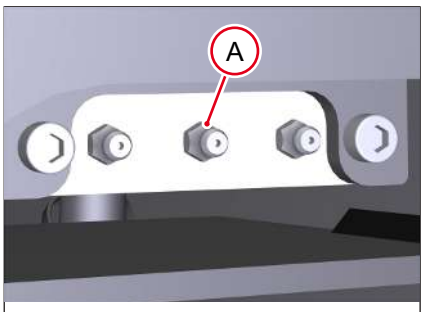

Fig. 263: Slewing ring bearing track

1. Deactivate the vehicle safely.
2. Lower the boom system and supports to the ground.
3. Switch off the engine, remove the starting key and store it.
4. Lubricate lubrication point **A** with two strokes from the grease gun.

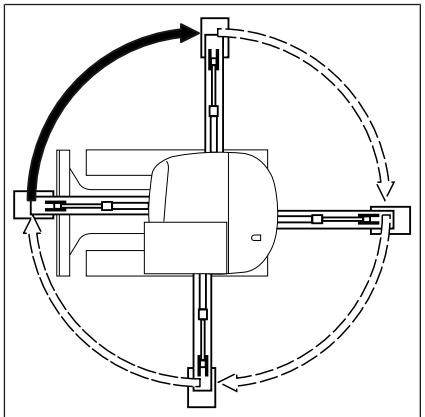

Fig. 264: Turn the upper carriage

5. Start the engine, raise the boom system and the supports.
6. Turn the upper carriage by 90°.
7. Repeat points 2-6 three times until the upper carriage is back in its original position.
8. Turn the upper carriage several times through 360°.

8.6.1.4 Slewing ring gearing



⚠ WARNING

Crushing hazard during lubrication!

Can result in serious injury or death.

- ► While the upper carriage is being turned, make sure that no persons are in the danger zone.
- ► Do not tilt the upper carriage.

The lubrication points are located on the right side of the chassis.

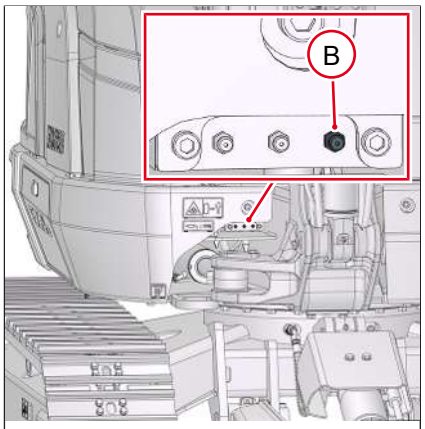

Fig. 265: Slewing ring gear lubrication point

1. Lower the dozer blade to the ground.
2. Switch off the engine, remove the starting key and store it.
3. Lubricate lubrication point **B** with five strokes from the grease gun.
4. Start the engine, raise the boom system and the dozer blade.

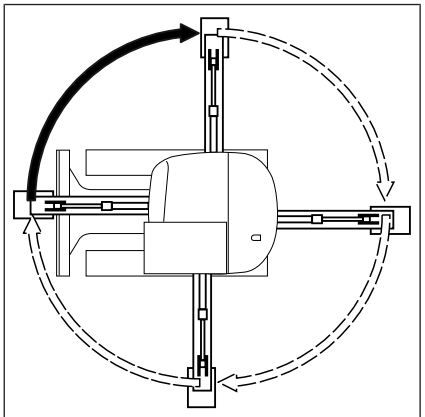

Fig. 266: Turn the upper carriage

5. Turn the upper carriage by 90°.
6. Repeat points 1-5 three times until the upper carriage is back in its original position.

8.6.1.5 Cab

Lubricate cab moving parts weekly.

Lubricate joystick base

Lubricate the moving parts of the joystick base weekly.

8.6.1.6 Power coupler systems and attachments

Lubricate the attachments at the marked points every day.

Lubrication points are located on the bolts or directly on the cylinders.

Operation in water

When used in water, lubricate twice a day.

- Lubricate affected lubrication points before operating in water.
- After operation in water, lubricate the lubrication points thoroughly so no water remains.



Information

The number and position of lubrication points can differ.

Easylock/Powertilt

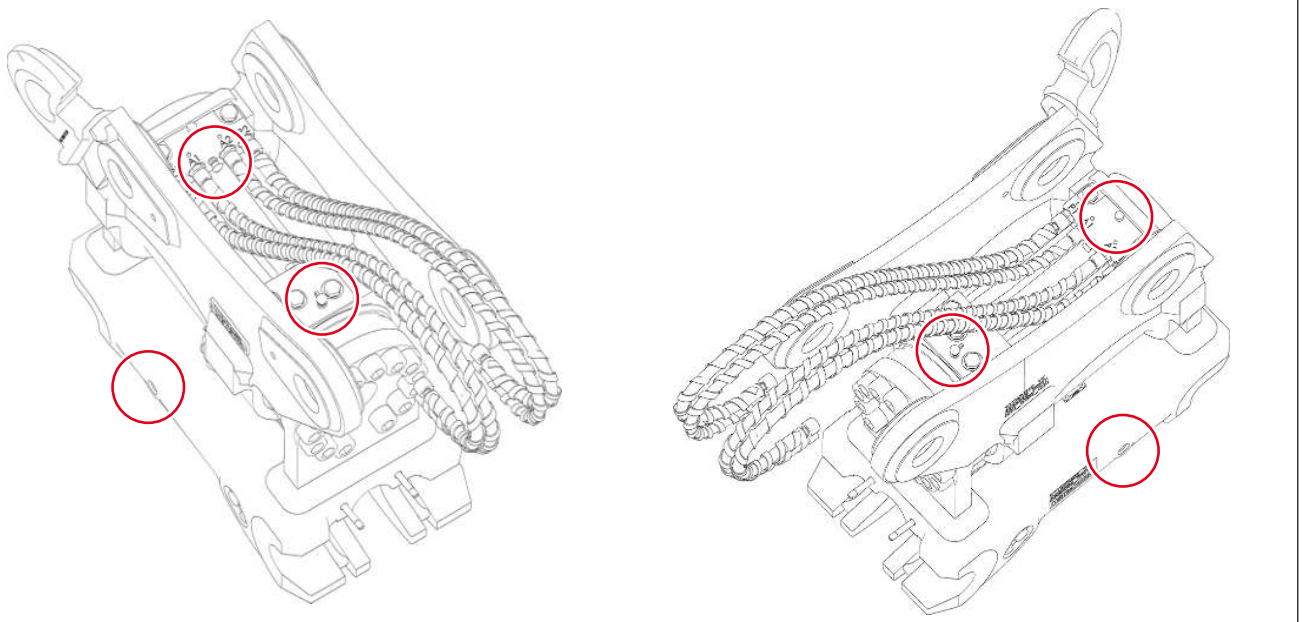

Fig. 267: Lubrication points on Easylock/Powertilt

Swivel bucket

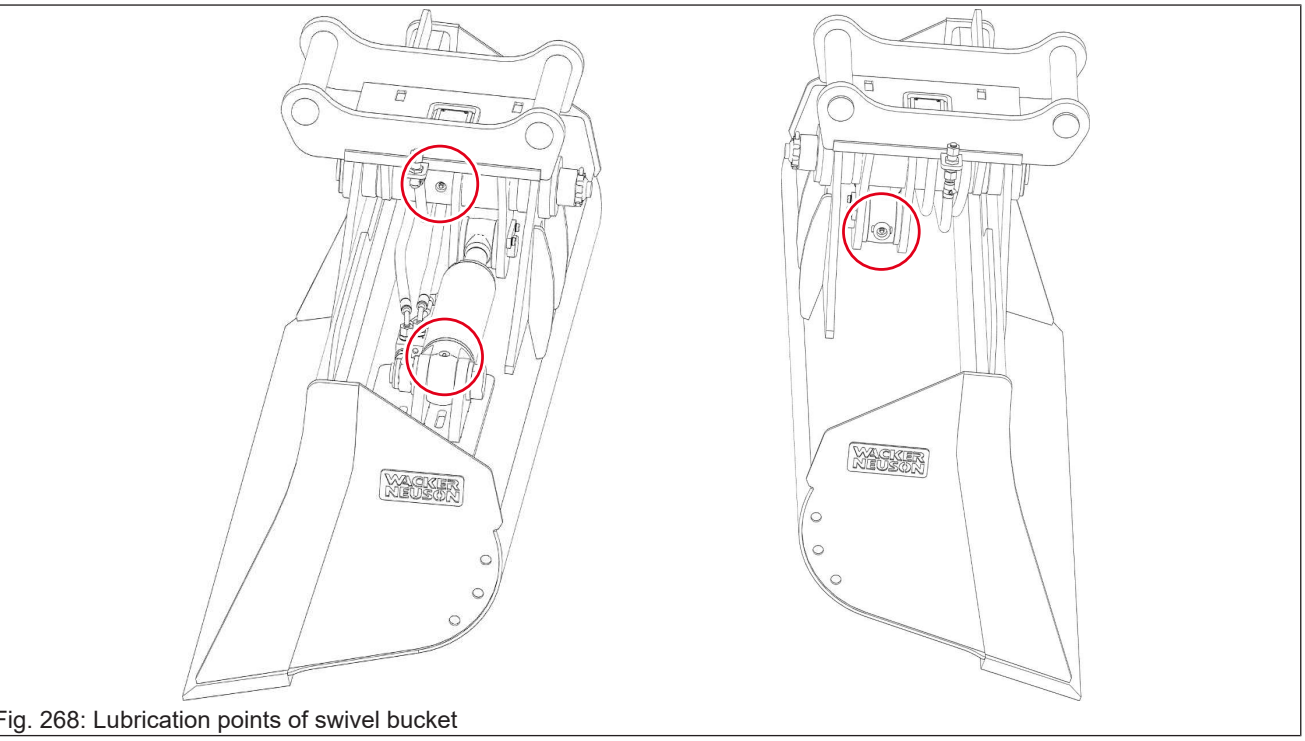

Fig. 268: Lubrication points of swivel bucket

Hydraulic thumb

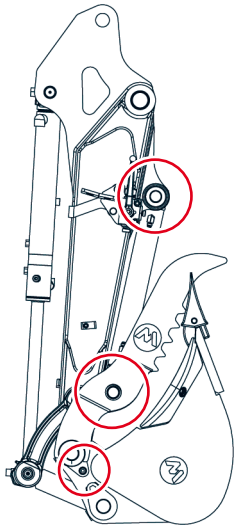

Fig. 269: Lubrication points of hydraulic thumb

Mechanical quick hitch system Lehnhoff

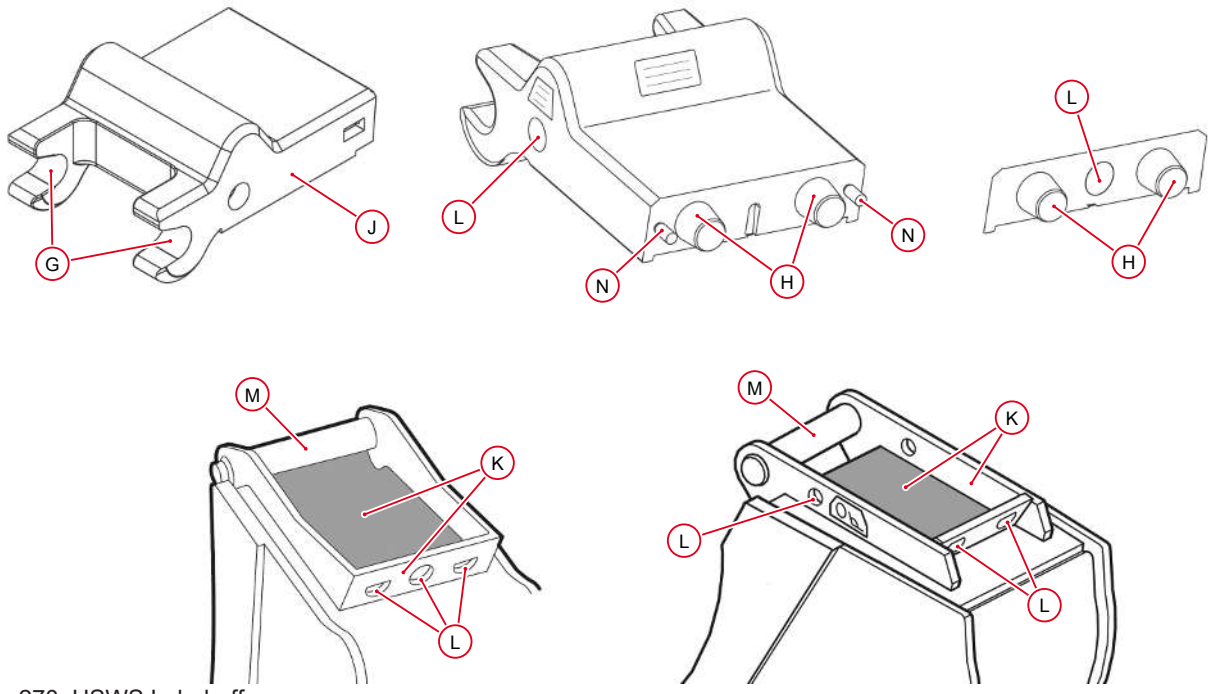

Fig. 270: HSWS Lehnhoff

Item	Maintenance quick hitch MS03/MS08/MS10 (operator)	Interval[1)]
-	Perform a visual check of the quick hitch system	daily
G	Clean bolt guide	weekly
H	Clean bolt contact surface	weekly
J	Clean the underside of the quick hitch	weekly
K	Clean attachment contact surfaces	weekly

Item	Maintenance quick hitch MS03/MS08/MS10 (operator)	Interval[1)]
L	Clean the opening for the key and holes of the attachment console	weekly
M	Clean attachment console bolts	weekly
N	Clean centering pins (MS10 only)	weekly

1) In the case of time specifications: the time specification reached first is authoritative. If the situation requires it, perform maintenance as needed, even if the maintenance interval has not yet been reached

Additional service intervals (authorized service center):

- Every 250 operating hours or annually (MS03)
- Every 500 operating hours or annually (MS03)
- Every 500 operating hours or annually (MS08/MS10)
- Every 1000 operating hours or annually (MS08/MS10)

For detailed information, contact an authorized service center.

8.7 Cleaning and care



⚠ WARNING

Risk of injury from rotating parts!

Rotating parts can lead to serious injury or death.

► Remove the starting key and store it in a safe place.

► Open maintenance access only when the engine is switched off.



⚠ CAUTION

Danger to health from cleaning agents!

Cleaning agents can be harmful to health.

► Only use suitable cleaning agents.

► Ventilate closed rooms well.



⚠ CAUTION

Burning hazard from hot surfaces!

May lead to injuries.

► Switch off the engine and let hot surfaces cool down.

► Wear protective equipment.



NOTICE

Damage caused by using incorrect solvents.

► Do not use solvents, gasoline or other aggressive chemicals.



NOTICE

Damage to electrical components due to water.

- ► Clean the vehicle only when the engine is switched off.
- ► Electronic components (e.g. relays, displays) must not be cleaned with a high-pressure cleaner.
- ► A distance of at least 50 cm (20 in) to the nozzle of the high-pressure cleaner must be maintained from electrical components (e.g. headlights, rotating beacons).
- ► Carefully dry electrical components with compressed air and spray with contact spray.



Environment

Only clean the vehicle in an approved washing area or in a washing bay.

Washing solutions

- Ventilate closed rooms well.
- Wear suitable protective clothing.
- Do not use flammable liquids such as gasoline or diesel.

Compressed air

- Work carefully.
- Wear eye protection and protective clothing.
- Do not point compressed air at the skin or other persons.
- Do not clean clothing with compressed air.

High-pressure cleaner

- Clean the vehicle only when the engine is switched off.
- Cover tank caps and filters.
- Do not direct the water jet under covers.
- Keep sufficient distance from labels.
- Protect sensitive components from moisture and do not clean with a high-pressure cleaner, e.g.:
  - Engine compartment, engine components, insulating material
  - Electrical components (e.g. alternator, control units, connector plugs on the wiring harness)
  - Covers and seals
  - Air filter, exhaust

Highly volatile and highly flammable corrosion inhibitors and sprays:

- Ventilate closed rooms well.
- Fire, open flame and smoking are prohibited.

8.7.1 Vehicle interior

Recommended aids:

- Vacuum cleaner, broom
- Moist cloths
- Brush
- Water with mild soapy water

Seat belt

- Keep the seat belt clean, as gross contamination can impair the function of the seat belt buckle.
- Clean the seat belt with a mild detergent solution. Do not clean chemically, as the fabric may be destroyed.

8.7.2 Vehicle exterior

Recommended aids:

- High-pressure cleaner

Cleaning in a salty environment

1. Check the vehicle for salt deposits or rust.
2. Completely remove salt deposits with a high-pressure cleaner.
3. Lubricate the lubrication points so that no water remains.
4. Let the vehicle dry and check again for salt deposits.

Loose screw connections and fastening gear

Contact an authorized service center.

8.8 Electrical system



⚠ WARNING

Risk of injury due to a defective battery!

Batteries emit flammable gases. These gases ignite easily and can cause fires or explosions. Serious injury or death may result.

► Wear protective equipment.
► Fire, open flame and smoking are prohibited.
► Do not jump start the engine if the battery is defective, frozen or if the acid level is too low.
► Do not place electrically conductive objects on the battery – short circuit hazard.



NOTICE

Damage to the electrical components.

► Do not place electrically conductive objects on the battery – short circuit hazard.
► The battery may only be checked, disconnected, charged and replaced by an authorized specialist workshop.



Environment

Dispose of used batteries in an environmentally friendly manner.

Maintenance and repair work on the electrical system may only be carried out by an authorized specialist workshop.

Defective parts of the electrical system must be replaced by an authorized specialist workshop.

- Light bulbs and fuses may be changed by the operator.

Battery

The battery may only be checked, disconnected, charged and replaced by an authorized service center.

8.9 Working hydraulics

8.9.1 Checking hydraulic system and hydraulic hoses

Check the hydraulic system and hydraulic lines daily for leaks and general condition.



NOTICE

Damage to the hydraulic system due to leaks and damaged hydraulic lines.

► Leaks and damaged hydraulic lines must be repaired immediately by an authorized service center. This increases the operational safety of the vehicle and contributes to environmental protection.

► Do not operate the vehicle with leaking or damaged hydraulic lines.

Hydraulic hoses are subject to natural aging. Therefore, they must be checked regularly, even if there is no visible damage which prevents safe operation.

Wacker Neuson recommends the following inspection intervals:

Normal wear	12 months
Increased wear (longer operating times, multi-shift operation, high outside temperatures, aggressive environmental conditions, etc.)	6 months

8.9.2 Responsibility for checking the hydraulic hoses

The decision regarding the intervals at which the hydraulic hoses are checked must be made by the vehicle operator and depends on the actual working situation.

The vehicle operator must appoint a qualified person to check the hydraulic hoses. In the case of visible damage, a hydraulic hose must be replaced immediately. Do not put the vehicle into operation. The results of this check must be kept in written form by the vehicle operator until the next inspection.

Wacker Neuson recommends replacing hydraulic hoses every six years from the date of manufacture.

The date of manufacture is located on the hydraulic hose.

- Only tighten leaking fittings and hose connections when the pressure is off. Reduce the pressure in the hydraulic system before working on pressurized lines.
- Do not weld or solder defective or leaking pressure lines and screw joints, but have them replaced.
- Wear protective equipment.

If one of the following problems is detected, have the respective line replaced immediately:

- Damaged or leaking hydraulic seals
- Worn or torn sheaths or uncovered reinforcing strands
- Sheaths stretched in several places
- Tangled or crushed moving parts
- Foreign bodies jammed in the covers

8.10 Engine

8.10.1 Air filter

Maintenance may only be carried out by an authorized service center.

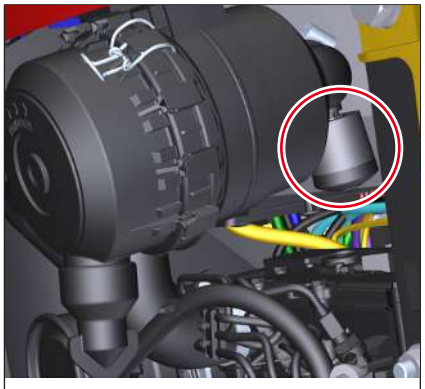

Fig. 271: Air filter contamination indicator

▪ Check contamination indicator.
  ⇨ If the yellow pistons of the contamination indicator has reached the red highlighted Service lettering, contact an authorized service center.

8.10.2 Checking the air intake

NOTICE

Damage caused by a contaminated air intake.

► Check contamination indicator and air intake daily before starting work.

► The air filter may only be changed by an authorized specialist workshop.

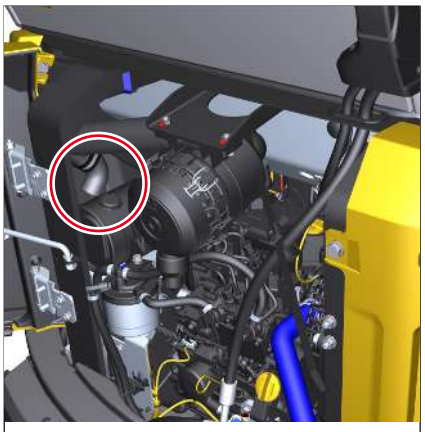

Fig. 272: Air intake

- Check air intake and clean if necessary.

8.10.3 Check V-belt

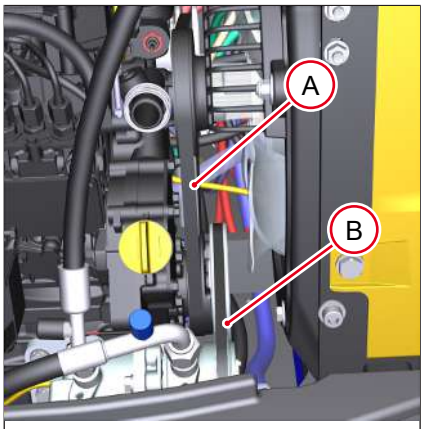

Fig. 273: Engine and air conditioning system V-belts

Visual check

If the V-belts **A** or **B** are damaged, contact an authorized service center.

Check V-belt tension

- Press on the V-belts **A** and **B** with a thumb force of approx. 100N. The measuring distance must be 10-14 mm (0.4-0.6 in).
  ⇨ If the value deviates, contact an authorized service center.

8.10.4 Bleed the fuel system



⚠ CAUTION

Burning hazard from hot surfaces!

May lead to injuries.

► Switch off the engine and let hot surfaces cool down.

► Wear protective equipment.



NOTICE

Damage to the engine due to improper bleeding of the fuel system.

► Do not start the engine while the fuel system is being bled.

Bleed the fuel system in the following cases:

- When the vehicle is put back into operation after a period of disuse of more than 30 days.
- If the tank was driven empty.

Venting (Yanmar)

1. Refuel.
2. Turn on the ignition for 15 seconds.
   ⇨ The fuel system is bled.
3. Switch off the ignition.
4. Start the engine and let it idle for five minutes.

8.10.5 Clean the radiator



⚠ CAUTION

Burning hazard from hot surfaces!

May lead to injuries.

► Switch off the engine and let hot surfaces cool down.

► Wear protective equipment.



NOTICE

Damage caused by cooler contamination.

► Check the radiator daily and clean it if necessary.

► If the working situation requires it, clean the radiator several times a day.

► Use compressed air to keep sufficient distance to the radiator fins.



Fig. 274: Clean the radiator

Clean the cooler with unlubricated compressed air and a maximum pressure of 2 bar (29 psi).

8.11 Tracks



⚠ WARNING

Crushing hazard when working under the vehicle!

Working under a track can lead to serious injuries or death.

► No one may be in the danger zone.

8.11.1 Checking track tension

8.11.1.1 Rubber track

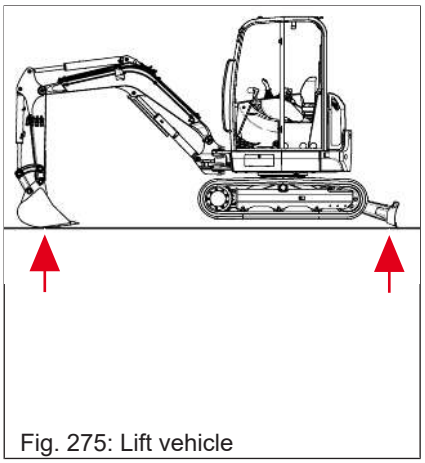

Fig. 275: Lift vehicle

1. Deactivate the vehicle safely.
2. Lift the vehicle with boom system and dozer blade horizontally.

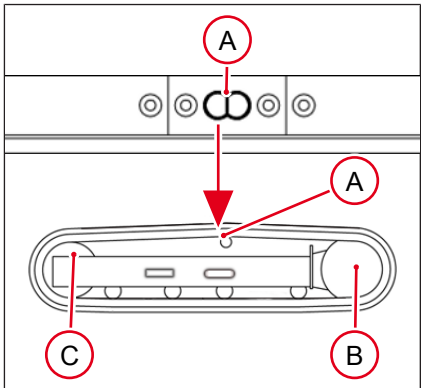

Fig. 276: Positioning the tracks

3. Position the track so that the mark **A** is located centrally between the drive wheel **B** and the track tensioning wheel **C**.
4. Switch off the engine.
5. Fold up the joystick base.
6. Remove the starting key and store it in a safe place.

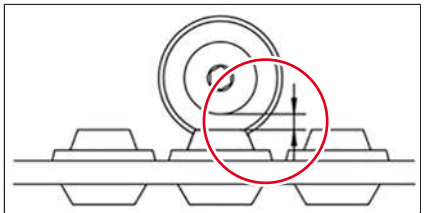
Fig. 277: Measuring distance

7. Check the measuring distance between the roller and the track. If the value differs, adjust the track tension.

Distance mm (in)	20-25 (0.8-1)

8.11.1.2 Steel track

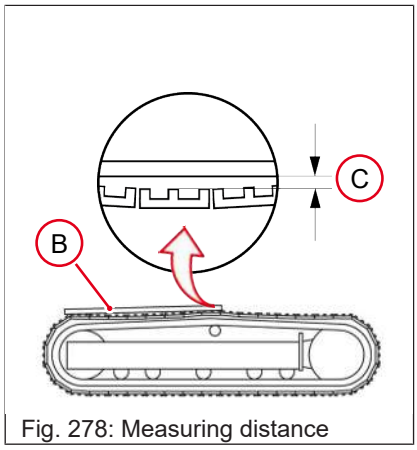

Fig. 278: Measuring distance

Place a measuring bar **B** over the two highest points of the track.

Check the measuring distance **C** between the roller and the track. If the value differs, adjust the track tension.

Measuring distance **C** in mm (in)	20-25 (0.8-1)

8.11.2 Correcting track tension



⚠ WARNING

Risk of injury due to grease leakage under pressure!

Grease escaping under pressure can penetrate the skin and can lead to serious injury or death.

- ► Open the lubrication valve only carefully and do not open it more than one turn.
- ► If the tension of the track cannot be reduced, contact an authorized service center.

NOTICE

Possible damage to the cylinder and track due to overvoltage.

► Tension the track only up to the specified measuring distance.

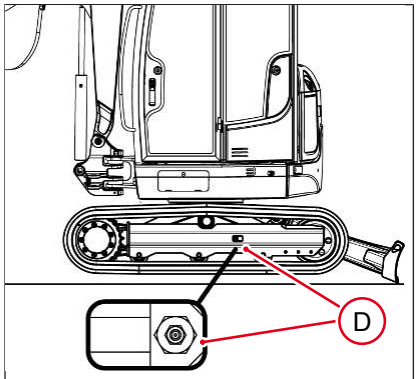

Fig. 279: Increasing tension

Increasing track tension

1. Deactivate the vehicle safely.
2. Lift the vehicle with boom system and dozer blade horizontally.
3. Switch off the engine.
4. Use the grease gun to pump grease into lubricating valve **D**.
5. Start the engine.
6. Lower the vehicle to the ground.
7. Run the engine without load at idling speed.
8. Move the vehicle slowly forwards and backwards and then park it.
9. Check the measuring distance.
   - ⇨ If the measuring distance deviates, repeat points 2-9.
   - ⇨ If the measuring distance continues to deviate, contact an authorized service center.

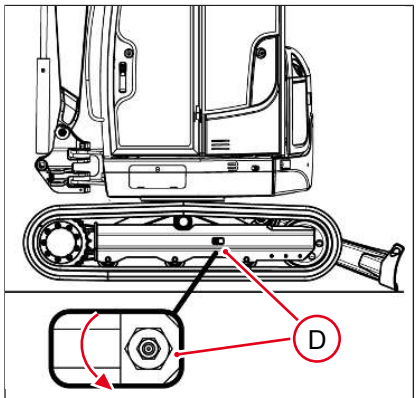

Fig. 280: Reducing tension

Reducing track tension

1. Deactivate the vehicle safely.
2. Lift the vehicle with boom system and dozer blade horizontally.
3. Position a container under the lubricating valve.
4. Screw on lubricating valve **D** slowly (max. one turn).
   - ⇨ The grease runs out.
5. Screw on lubricating valve **D**.
6. Start the engine.
7. Lower the vehicle to the ground.
8. Run the engine without load at idling speed.
9. Move the vehicle slowly forwards and backwards and then park it.
10. Check the measuring distance.
    - ⇨ If the measuring distance deviates, repeat points 2-10.
    - ⇨ If the measuring distance continues to deviate, contact an authorized service center.

Environment

Collect leaking vehicle fluids with a suitable container and dispose of them in an environmentally friendly manner.

9 Troubleshooting

9.1 Faults, causes and remedies

The display informs the operator about operating conditions, maintenance measures or possible malfunctions.

The symbols and the setting options can vary.

In addition to the symbols, a call sign can appear in the display and a warning buzzer sound The symbols may light up or flash at different rates.

Error messages

Symbol	Description	Side
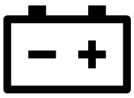	**Charge indicator light** Possible defect of the alternator, the V-belt or the battery. ▪ Increase engine speed. ⇨ If the **charging control** indicator lamp no longer light ups after one minute, there is no fault in the electrical system. ⇨ If the **charge control** indicator lamp remains lit, stop the engine and contact an authorized service center.	[⇢ 98]
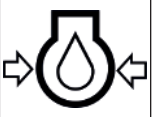	**Engine oil pressure** Possible electrical fault. ▪ Switch off engine, check oil level and top up oil if necessary ⇨ If the **oil pressure** indicator light remains illuminated, switch off the engine and contact an authorized service center.. ⇨ If the **oil pressure** warning light does not come on when the engine is started, stop work immediately and contact an authorized service center	[⇢ 177]
	General malfunction Various errors can exist. A restricted operation is possible. 1. Contact an authorized service center. 2. The error code is shown on the display.	[⇢ 42]
 +	**Error safe load indicator** Increased risk of tilting The vehicle may not be used in lifting gear application. ▪ Contact an authorized service center.	[⇢ 115]

Symbol	Description	Side
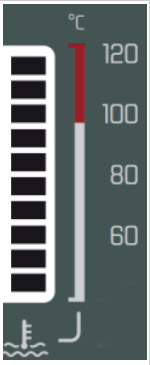	**Coolant temperature** If the coolant temperature is too high, the display of the coolant temperature **flashes.** 1. Run the engine without load at high idling speed. 2. Wait until temperature has dropped, the bar no longer flashes and the indicator light is off. 3. Switch off the engine. 4. Check coolant level and air intake. ⇨ If the error message persists, switch off the engine immediately and contact an authorized service center.	[▷ 179] [▷ 193]
  	**Error HSWS** If the **closing pressure** was not reached in time or the **closing time** was exceeded, all three symbols on the display **flash** simultaneously. ▪ Restart the engine. ⇨ If the error message persists, contact an authorized service center.	--



NOTICE

Damage caused by ignoring malfunctions or error symptoms.

► In the event of faults or symptoms not listed in the following tables or which persist after properly performed maintenance work, contact an authorized specialist workshop.

9.2 Error symptoms

Symptom	Possible cause	Possible remedy	see
General			
The engine does not start or starts badly	The joystick base is not folded up	Fold up joystick base	[▷ 88]
The vehicle does not start.	Seat not assigned Seat belt is not fastened	Sit down on the seat Fasten the seat belt	--
Hydraulic functions cannot be operated	Blocked working hydraulics	Unlock working hydraulics	--
Hydraulic functions cannot be operated	Joystick base is folded up	Joystick base is folded down	[▷ 88]
Electrical components do not function	Defective fuse	Check the fuses and replace if necessary	[▷ 211]
The hydraulic system becomes too hot	Hydraulic oil level too low	Refill hydraulic oil	[▷ 173]
The hydraulic system becomes too hot	Excessively high vehicle load	Reduce the vehicle load	--
The hydraulic system becomes too hot	Hydraulic oil cooler dirty	Clean the hydraulic oil cooler.	[▷ 194]

Symptom	Possible cause	Possible remedy	see
The engine becomes too hot	Dirty radiator	Clean the radiator	[} 194]
Combustion engine			
The engine does not start or starts badly	Empty fuel tank	tank	[} 174]
The engine does not start or starts badly	Defective or discharged battery	Contact an authorized service center	--
The engine does not start or starts badly	Defective fuse	Check the fuses and replace if necessary	[} 211]
The engine runs irregularly or stalls	Air in the fuel system	Bleed the fuel system	[} 194]
The engine runs irregularly or stalls	Water in fuel	Empty water separator	[} 177]
The engine runs irregularly or stalls	Wrong fuel	Observe the table of **operating materials**	[} 169]
Shortened DPF regeneration intervals	Regular operation with a cold engine	Avoid running with a cold engine	[} 88]
Shortened DPF regeneration intervals	Wrong motor oil	Observe the table of **operating materials**	[} 169]
Reduced driving performance/the maximum speed is not reached	Excessively low hydraulic oil temperature	Bring the vehicle to operating temperature.	[} 88]
Reduced driving performance/the maximum speed is not reached	Operating temperature too high	Allow engine to cool down in idle and contact authorized service center.	--
Reduced driving performance/the maximum speed is not reached	Maintenance not carried out	Perform maintenance	--
White exhaust gas smoke	Wrong fuel	Observe the table of **operating materials**	[} 169]
White exhaust gas smoke	Air intake clogged, dirty air filter	Check air intake and, if necessary, contact authorized service center.	[} 193]
White exhaust gas smoke	Excessively low operating temperature	Bring the vehicle to operating temperature.	[} 88]
White exhaust gas smoke	Excessively hot suction air	Check the air filter and, if necessary, contact authorized service center.	[} 192]
White exhaust gas smoke	Loose or defective V-belt	Check the V-belt and, if necessary, contact authorized service center.	[} 193]
White exhaust gas smoke	Excessively low coolant level	Refill coolant	[} 180]
White exhaust gas smoke	Operation at excessively high altitudes; outside temperatures too high	Load the engine	--
White exhaust gas smoke	Engine is permanently operated with too low a load	Load the engine	--

Symptom	Possible cause	Possible remedy	see
Black exhaust gas smoke	Wrong fuel	Observe the table of **operating materials**	[▷ 169]
Black exhaust gas smoke	Clogged air intake, dirty air filter	Check air intake and, if necessary, contact authorized service center.	[▷ 193]
Black exhaust gas smoke	Excessively low operating temperature	Bring the vehicle to operating temperature.	[▷ 88]
Black exhaust gas smoke	Operation at excessively high altitudes; outside temperatures too high	Load the engine	--
Blue exhaust gas smoke	Clogged air intake, dirty air filter	Check air intake and, if necessary, contact authorized service center.	[▷ 193]
Blue exhaust gas smoke	Engine oil level too high, motor oil consumption is too high	Contact an authorized service center	--
Blue exhaust gas smoke	Operation at excessively high altitude; outside temperatures too high	Load the engine	--
The engine becomes too hot	High intake air temperature due to a defective or poorly fitted air filter gasket	Check the air filter and, if necessary, contact authorized service center.	[▷ 192]
The engine has too little power	Dirty air filter	Check the air filter and, if necessary, contact authorized service center.	[▷ 192]
The engine becomes too hot	Excessively low coolant level	Refill coolant	[▷ 180]
The engine becomes too hot	Engine oil level too low	Refill motor oil	[▷ 178]
The engine becomes too hot	Dirty air filter	Check the air filter and, if necessary, contact authorized service center.	[▷ 192]
The engine becomes too hot	Loose or defective V-belt	Check the V-belt and, if necessary, contact authorized service center.	[▷ 193]
The engine has no or excessively low oil pressure	Engine oil level too low	Refill motor oil	[▷ 178]
Excavator			
The upper carriage can only be swiveled with great difficulty or not at all	Slewing ring or ball race not lubricated	Lubricate the slewing ring or ball race	[▷ 183]
The upper carriage can only be swiveled with great difficulty or not at all	Upper carriage locked	Unlock the upper carriage	Lock the upper carriage
The powertilt does not maintain its position	The internal relief valve has activated	Repeat the operation with less load. If the problem persists, contact an authorized service center.	--
Crawler excavator			

Symptom	Possible cause	Possible remedy	see
The vehicle does not go straight	Unevenly worn servicing tracks	Contact an authorized service center	--
The vehicle does not go straight	Incorrect track tension	Correcting track tension	[} 195]
The vehicle does not go straight	Heavily soiled servicing tracks	Clean the servicing tracks	--
Cab			
The cabin is not adequately heated or cooled	Excessively low refrigerant level in the air conditioning system	Contact an authorized service center	--
The cabin is not adequately heated or cooled	Dirty cab air filter	Clean the cab air filter and, if necessary, contact authorized specialist workshop	[} 162]
The cabin is not adequately heated or cooled	Dirty air conditioning condenser	Cleaning climate condenser	Clean climate condenser

10 Shutdown

10.1 Temporary shutdown

The specified measures relate to the decommissioning and restarting of the vehicle after more than 30 days.

Shutdown

The vehicle should be stored in a closed room.

Outdoors, the vehicle should be parked on a solid surface (e.g. concrete) and covered with a waterproof tarpaulin.

1. Deactivate the vehicle safely.
2. Clean the engine in a washing area approved for this purpose or in a washing bay as described in the chapter on **Cleaning and care**.
3. Check the vehicle for leaking liquids.
4. Check screw connections for tightness.
5. Clean and dry the entire vehicle as described in the **Cleaning and Care** chapter.
6. Treat bare metal parts (e.g. piston rods of hydraulic cylinders) with anti-corrosion agent.
7. Lubricate the vehicle according to the lubrication schedule.
8. Fill up the vehicle with fuel.
9. Check and refill hydraulic oil and coolant.
10. Disconnect the battery from the system using the battery isolating switch.
11. Cover upward-pointing exhaust pipes without condensation drainage.
12. Charge the battery completely. This increases the service life and prevents the battery from freezing. The charging current of the charger should be at least 10% of the battery capacity. Observe the operator's manual of the battery charger.

Battery freezing limits

Battery charge level	Freezing limit
Fully charged	-70°C (-94 °F)
Half charged	-20°C (-4°F)
Discharge	0°C (32 °F)

Recurring activities

Start the engine once a month to lubricate it. Carry out all necessary measures beforehand, e.g.:

- Maintain, charge and install battery
- Check operating materials and top up if necessary
- Clear air intake and exhaust

After starting the engine, carry out the points according to **temporary Immobilization**.

10.2 Putting back into operation



Information

If the above steps are not carried out, contact an authorized specialist workshop before restarting.

Putting back into operation

1. Carry out a visual inspection for damage to electrical cables, plugs, fuel lines, etc. on the engine.
2. Remove anti-corrosion agent from bare metal parts.
3. Clear the air intake and exhaust tailpipe.
4. Check the air filter and have it replaced by an authorized specialist workshop if necessary.
5. Checking the dust valve
6. Lubricate the vehicle according to the lubrication plan.
7. Check the operating materials and fill if necessary.
8. Have the hydraulic oil filter (pressure filter, return flow filter and breather filter), engine oil filter and fuel filter (prefilter and main filter) changed by an authorized specialist workshop after a standing period of six months.
9. Switch on the ignition and check whether there are any faults. In the event of faults, contact authorized specialist workshop.
10. Start the engine.
11. Run the engine at idle speed with no load for at least five minutes.
12. Switch off the engine.
13. Check all oil levels in the aggregates and top up oil if necessary.
14. Check the vehicle for escaping operating materials.

Do not operate the vehicle at maximum speed or maximum load for at least one hour.

10.3 Permanent shutdown

Disposal

The vehicle may only be disposed of by an authorized service center.

11 Technical Data

11.1 Dimensions

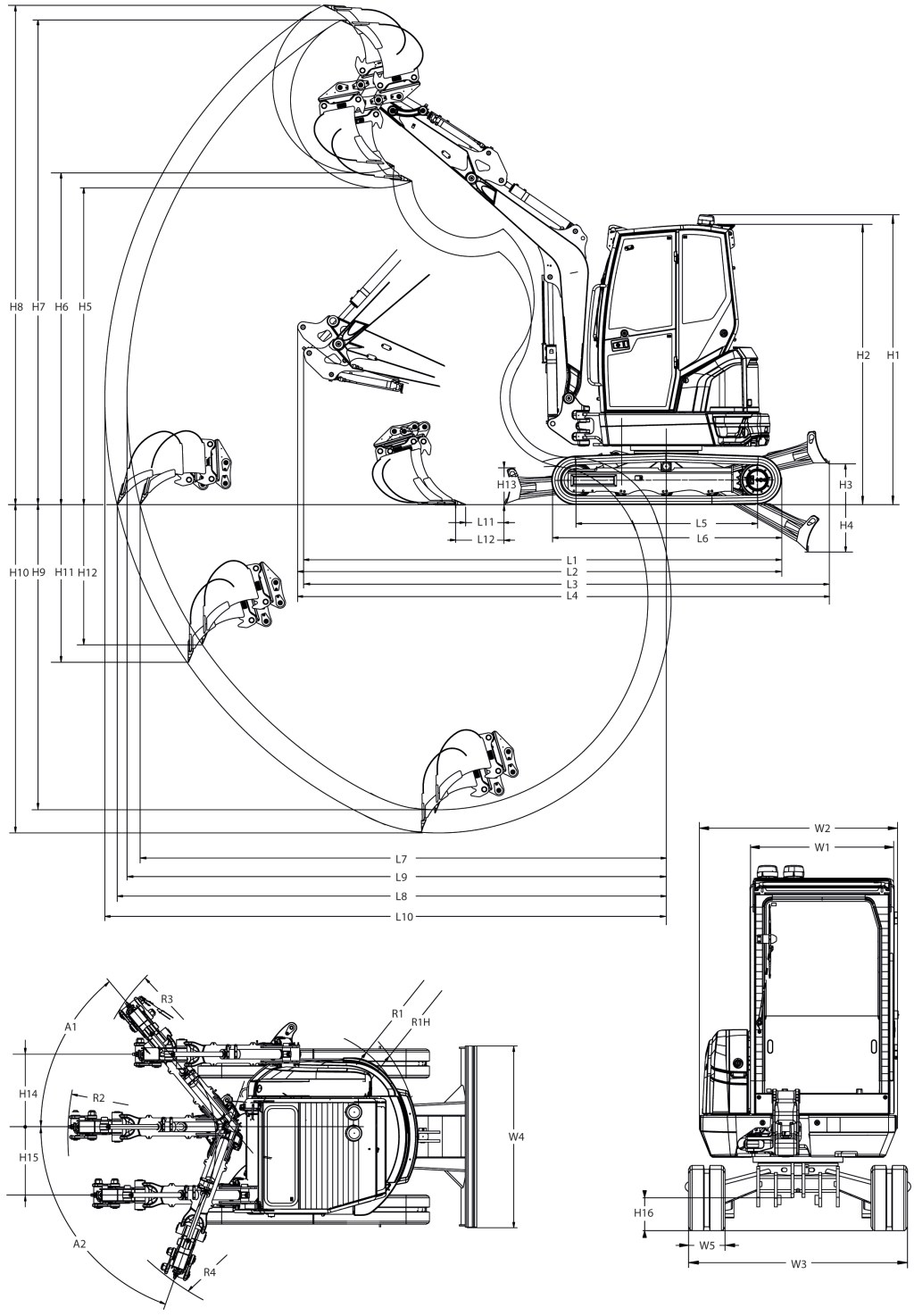

Fig. 281: Dimensions

	Rubber track 250 mm (10 in)	Rubber track 300 mm (12 in)	Steel track 300 mm (12 in)
	mm (in/ft-in)	mm (in/ft-in)	mm (in/ft-in)

	Rubber track 250 mm (10 in)	Rubber track 300 mm (12 in)	Steel track 300 mm (12 in)
H1	2502 (99)	2502 (99)	2524 (99)
H2	2412 (95)	2412 (95)	2434 (96)
H3	352 (14)	352 (14)	374 (15)
H4	409 (16)	409 (16)	387 (15)
H5	2764 (9'-0")	2764 (9'-0")	2764 (9'-0")
H6	2893 (9'-6")	2893 (9'-6")	2893 (9'-6")
H7	4151 (13'-7")	4151 (13'-7")	4151 (13'-7")
H8	4280 (14'-1")	4280 (14'-1")	4280 (14'-1")
H9	2603 (8'-6")	2603 (8'-6")	2603 (8'-6")
H10	2803 (9'-2")	2803 (9'-2")	2803 (9'-2")
H11	1281 (50)	1281 (50)	1281 (50)
H12	1124 (44)	1124 (44)	1124 (44)
H13	314 (12)	314 (12)	314 (12)
H14	622 (24)	622 (24)	622 (24)
H15	584 (23)	584 (23)	584 (23)
H16	263 (10)	263 (10)	285 (11)
L1	4199 (13'-9")	4199 (13'-9")	4199 (13'-9")
L2	4212 (13'-10")	4212 (13'-10")	4212 (13'-10")
L3	4604 (15'-1")	4604 (15'-1")	4604 (15'-1")
L4	4617 (15'-2")	4617 (15'-2")	4617 (15'-2")
L5	1565 (62)	1565 (62)	1576 (62)
L6	1982 (78)	1982 (78)	2037 (80)
L7	4508 (14'-9")	4508 (14'-9")	4508 (14'-9")
L8	4706 (15'-5")	4706 (15'-5")	4706 (15'-5")
L9	4622 (15'-2")	4622 (15'-2")	4622 (15'-2")
L10	4813 (15'-9")	4813 (15'-9")	4813 (15'-9")
L11	351 (14)	351 (14)	351 (14)
L12	437 (17)	437 (17)	437 (17)
R1	819 (32)	819 (32)	819 (32)
R1H	896 (35)	896 (35)	896 (35)
R2	2102 (83)	2102 (83)	2102 (83)
R3	1982 (78)	1982 (78)	1982 (78)
R4	1729 (68)	1729 (68)	1729 (68)
W1	980 (39)	980 (39)	980 (39)
W2	1350 (53)	1350 (53)	1350 (53)
W3	1500 (61)	1550 (61)	1550 (61)
W4	1550 (61)	1550 (61)	1550 (61)
W5	250 (10)	300 (12)	300 (12)
	Degree (°)	**Degree (°)**	**Degree (°)**
A1	50	50	50
A2	70	70	70

11.2 Weights

11.2.1 Vehicle

Base vehicle (short dipper, canopy, rubber track 250mm)	kg (lbs)
Transport weight[1)]	2273 (5.011)
Operating weight[2)]	2455 (5.412)

1) Basic vehicle + 10% fuel tank capacity

2) Basic vehicle + full fuel tank capacity + backhoe 600 mm (24 in) + operator (75 kg/165 lbs)

Information

The values can deviate by ± 2%.

11.2.2 Determine loading weight

The basis for calculating the loading weight is the transport weight on the vehicle type label. Subsequently mounted options and attachments (e.g. bucket, Easy Lock, hammer bracket) are added to the transport weight, fuel according to tank volume.

Option[1)]	EZ26
	kg (lbs)
Steel track 300mm	190 (419)
Additional weight	87 (192)
Cab	85 (187)
Rubber track 300mm	20 (44)
Front protection screen	33 (73)
Overload indicator advanced	13 (29)
HSWS preparation	10 (22)
Attachments	[} 208]
Full fuel tank	33 (73)

1) Weight specifications for options only refer to Wacker Neuson original accessories.

Information

The weights indicated are exemplary. To determine the actual weight, the vehicle must be weighed before transportation

11.2.3 Attachments



⚠ WARNING

Accident hazard due to non-approved attachments!

The use of non-approved attachments can cause the vehicle to tip over, which can lead to serious injury or death.

► Only use attachments approved by Wacker Neuson.



NOTICE

Damage caused by non-approved attachments.

► Only use approved attachments.

► For further information, please contact a Wacker Neuson sales partner.

Compare the weight of the attachment, including the maximum payload, with the specifications in the corresponding lifting capacity chart or load capacity chart. Do not exceed the maximum permitted load on the boom system according to the lifting capacity chart or load capacity chart.



Information

For the operation and maintenance of attachments such as hammer, gripper, hydraulic power coupler, etc., refer to the operating and maintenance instructions of the attachment manufacturer.

Technical data of the attachments

The weights given are exemplary and serve only as a guide. The actual weight can be lower or higher. To determine the actual weight, the attachment must be weighed.

Not all attachments are available for every vehicle.

There may be additional bucket widths that are not specified in this operator's manual.

Only use attachments approved by Wacker Neuson. For further information, please contact a Wacker Neuson sales partner.

Observe national and regional regulations.

Vehicle class 2-3 tonnes		
Bucket	**Width mm (in)**	**Weight kg (lbs)**
Backhoe bucket	250 (10)	40-55 (90-125)
	300 (12)	45-60 (100-135)
	400 (16)	55-70 (125-155)
	500 (20)	60-80 (135-180)
	600 (24)	70-90 (155-200)
	700 (28)	75-100 (165-220)

Vehicle class 2-3 tonnes		
Bucket	**Width mm (in)**	**Weight kg (lbs)**
Trench clearing bucket	850 (33)	65-75 (145-165)
	1000 (39)	75-105 (165-235)
	1200 (47)	85-120 (190-265)
	1400 (55)	130-145 (290-320)
Swivel bucket	850 (33)	105-120 (235-265)
	1000 (39)	115-155 (255-345)
	1200 (47)	125-175 (280-390)

Accessories vehicle class 2-3 tonnes	Weight kg (lbs)
Consoles (Easy Lock, System Lehnhoff, etc.)	30-60 (70-135)
Hydraulic hammer	110-260 (245-575)
Powertilt (Consoles, Easy Lock, etc.)	70-150 (155-335)

11.3 Engine

11.3.1 Engine data

Engine[1)]	
Manufacturer	Yanmar
Type	3TNV80F-NPWN
Design	Water-cooled 4-stroke diesel engine
Intake system	Natural intake
Number of cylinders	3
Fuel injection system	Indirect injection
Engine control unit	mechanical
Displacement	1267 cm^3 (77.3 in^3)
Bore and stroke	80 x 84 mm (3.2 x 3.3 in)
Rated power at rated speed	14.6 kW at 2570 min^{-1} (19.6 hp at 2.570 rpm)
Engine power at set maximum speed	
Power mode	13.4 kW at 2350 min^{-1}
Max. torque[2)]	65.6 Nm/1800 min^{-1} (48 ft.lbs/1.800 rpm)
Maximum speed without load (power mode)	2350 min^{-1} (rpm)
Starting aid	Glow plugs
Exhaust gas aftertreatment	None
Exhaust gas values in compliance	EU level V EPA Tier 4 final
Incline position of engine[3)]	Page [16]
Max. permissible permanent inclination in the engine transverse axis	25°
Max. permissible permanent inclined position in the engine longitudinal axis	25°
Max. permissible short-term inclination in the engine transverse axis	30°

Engine[1)]	
Max. permissible short-term inclination in the engine longitudinal axis	30°
Specific fuel consumption at nominal power and 100% engine power	≤ 269 g/kWh (≤ 0.44 lbs/hph)

1) performance data may vary by ± 3%. Specified values are valid at an outside temperature of 25 °C (77 °C) and 100 m (328 ft) above sea level.

2) Torque specifications can deviate by ± 5%.

3) These values indicate the safe supply of motor oil to the engine. Vehicle operating limits vehicle deviate from these values. Do not exceed the vehicle's operating limits.

11.4 Electrical system



⚠ WARNING

Fire hazard due to improper handling of electrical components!

Can lead to serious injury or death.

- ► Only use prescribed fuses.
- ► Do not repair or bypass fuses.
- ► If a fuse that has just been replaced blows again, do not operate the vehicle and contact an authorized service center.



NOTICE

Damage caused by using incorrect fuses.

- ► Only use prescribed fuses.
- ► Do not repair or bypass fuses.
- ► If a fuse that has just been replaced blows again, do not operate the vehicle and contact an authorized specialist workshop.

11.4.1 Electrical components

Electrical components	
Alternator	12V/55A
Starter	12 V/1.1 kW (1.5 hp)
Battery	12 V/44 Ah
12 V plug receptacle	15A

11.4.2 Fuses and relays

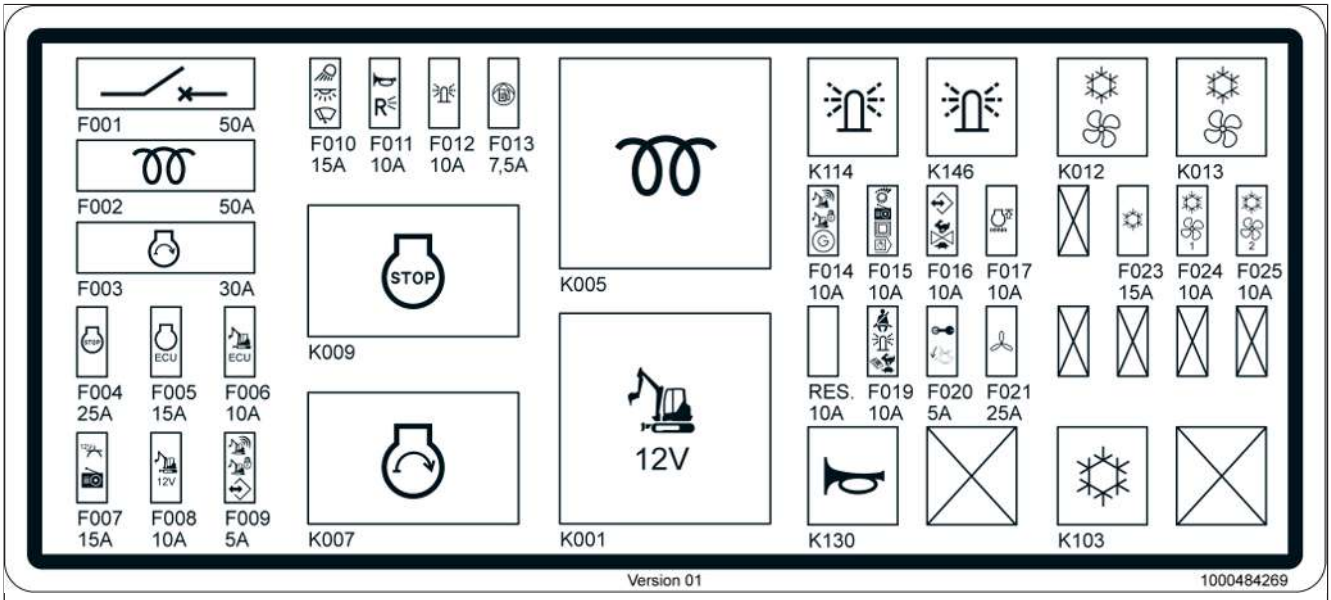

Fig. 282: Label Fuses and relays

Fuses	
F001	Main fuse
F002	Pre-glowing
F003	Start
F004	Shut-off magnet
F005	Vehicle control unit
F006	Vehicle control unit
F007	Radio, socket
F008	Start signal
F009	Telematic, drive interlock, diagnosis plug
F010	Headlight, interior light, windshield wipers, washer system
F011	Horn, driving signal
F012	Orange/green rotating beacons
F013	Fuel pump
F014	Alternator, telematics, drive interlock
F015	Key pad, jog dial, display, Powertilt, radio
F016	Diagnostic plug, changeover Powertilt controller, speed range selection valve
F017	Manual throttle
F019	Safety belt contact, green rotating beacons, switch for speed range selection, control circuit
F020	Ignition, Joystick base
F021	Ventilation
F023	Air conditioning compressor
F024	Condenser fan
F025	Condenser fan

Relay	
K001	Main relay
K005	Pre-glowing

Relay	
K007	Start
K009	Switching relay Stopping solenoid
K012	Condenser fan
K013	Condenser fan
K103	Air conditioning compressor
K114	Orange rotating beacon
K130	Horn
K146	green rotating beacon

11.4.3 Lamps

Lamps		
Boom headlights	LED[1)]	--
Roof headlight front/rear	LED	--
Interior light	Tubular lamp	12V/10W R10
Orange rotating beacon	LED	--
Green rotating beacon	LED	--

1) LED lamps cannot be changed.

11.4.4 Electrical connections

11.4.4.1 Plug receptacles



Fig. 283: Cab 12V lug receptacle

12V power outlets are available inside the cab on the right side under the seat console and on the outside right side of the cab.

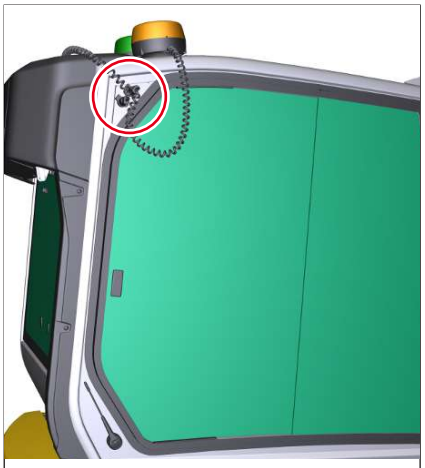

Fig. 284: 12V plug receptacle in cab roof

11.4.4.2 USB



Fig. 285: USB connection

A USB port is located at the front right of the cab.

Information

USB functionality is only available with radio option. Refer to the radio operator's manual for information on USB port functionality.

11.5 Under carriage

11.5.1 Drive system

Drive system	
Model	Axial piston engine

11.5.2 Tracks

Type	Width mm (in)
Rubber track series	250 (10)
Rubber track	300 (12)
Steel track	300 (12)

Ground pressure at operating weight	kg/cm² (lbs/in²)
Rubber track 250 mm	0.29 (4.1)
Rubber track 300 mm	0.24 (3.4)
Steel track	0.26 (3.7)

11.5.3 Maximum speed

Speed range	Maximum speed
Speed range 1	2.5 km/h (1.5 mph)
Speed range 2	4.3 km/h (2.7 mph)

11.6 Hydraulics

11.6.1 Working hydraulics

	EZ26
max. operating pressure	240 ±5 bar (3.481 ±72 psi)
Hydraulic tank content	19.4 liters (5.1 gal)
Oil flow of operating pump	65.8 l/min (17.4 gal/min)
Filter	Suction filter, return filter, ventilating filter
Upper carriage turning range	360°
Upper carriage speed	9.5 rpm

11.6.2 Digging forces

	kN (lb)
Max. tearing force (short dipper stick)	15.7 (3.530)
Max. tearing force (long dipper stick)	13.8 (3.102)
Max. breakout force (at the bucket tooth)[1)]	20.3 (4.564)
Max. breakout force (at knife edge)[2)]	22.6 (5.081)

1) according to DIN 24086

2) according to ISO 6015

11.7 Emissions

11.7.1 Exhaust emissions

CO_2 emission	g/kWh
	1017

11.7.2 Noise emissions

Sound power level LwA	
measured	90.0 dB(A)
guaranteed	93 dB(A)
Uncertainty factor K	3.0

Hearing protection is recommended for the sound pressure level at the operator station from a value of 80 dB. From a value of 85 dB, hearing protection must be worn.



Information

LwA in accordance with ISO 6395 (EC Directive 2000/14/EC)

LpA in accordance with ISO 6396 (EC Directive 2000/14/EC)

Uncertainty factor K in accordance with ISO 4871 (EC Directive 2000/14/EC)

Measurement environment in accordance with ISO 3744.

11.7.3 Vibrations

Vibrations[1)]	
Upper limb effective acceleration value (Hand-arm vibrations)	Trigger value < 2.5 m/s^2
Effective acceleration value for the body (Whole body vibrations)	Trigger value < 0.5 m/s^2

1) Measurement uncertainty according to DIN EN 474-1:2014-03

11.8 Bearing load



⚠ WARNING

Crushing hazard due to the vehicle tipping over!

A tipping vehicle can cause serious injury or death.

- ► Do not exceed the weights indicated in the load capacity charts.
- ► Subtract the weight of the attachment and load from the weight in the relevant chart column.
- ► Take the density of the load into account.
- ► The ground must be horizontal, stable and even.
- ► Only operate the vehicle in lifting gear application if the prescribed lifting equipment and safety devices are present, functional and activated.
- ► The boom system must stand straight in relation to the cab.



NOTICE

If the weight is exceeded, there is a risk of material damage due to the vehicle tipping over.

- ► Do not exceed the weights indicated in the load capacity charts.

Information

The data only represents approximate values. Attachments, uneven ground and soft or poor ground conditions affect the stability and thus the weight or mass values to be manipulated. The operator must take these influences into account.

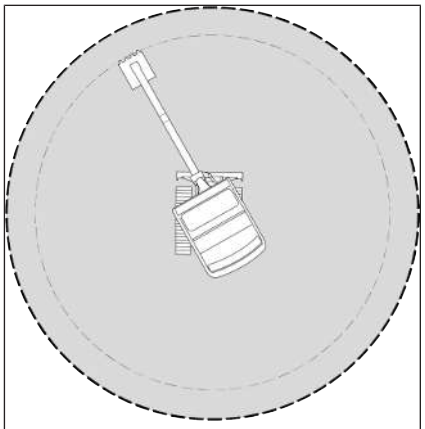

Fig. 286: Danger zone for lifting gear applications

The permissible lifting capacity applies to the entire swivel range of 360°.

All table values are given in kg (lbs), in a horizontal position on a stable and level surface without a bucket or an interchangeable attachment.

The lift capacity of the vehicle is limited by the setting of the relief valves and hydraulic power or by the safety against tipping.

Neither 75% of the static tipping load nor 87% of the hydraulic lift capacity is exceeded.

Calculation basis: according to ISO 10567

Setting pressure on the boom cylinder:

24000 kPA (3,481 psi)

Lifting capacities apply to vehicles under the following conditions:

- Lubricants and operating fluids at the prescribed positions
- Full fuel tank
- Cab or canopy, unless otherwise specified
- Vehicle at operating temperature
- Operator weight 75 kg (165 lbs)

Designation	Explanation
X	Outreach of slewing ring center
Z	Load hook height in the respective zone
max.	Permissible lift capacity with extended boom system
L	Dipper stick short/long

01 Rubber track 250mm/canopy

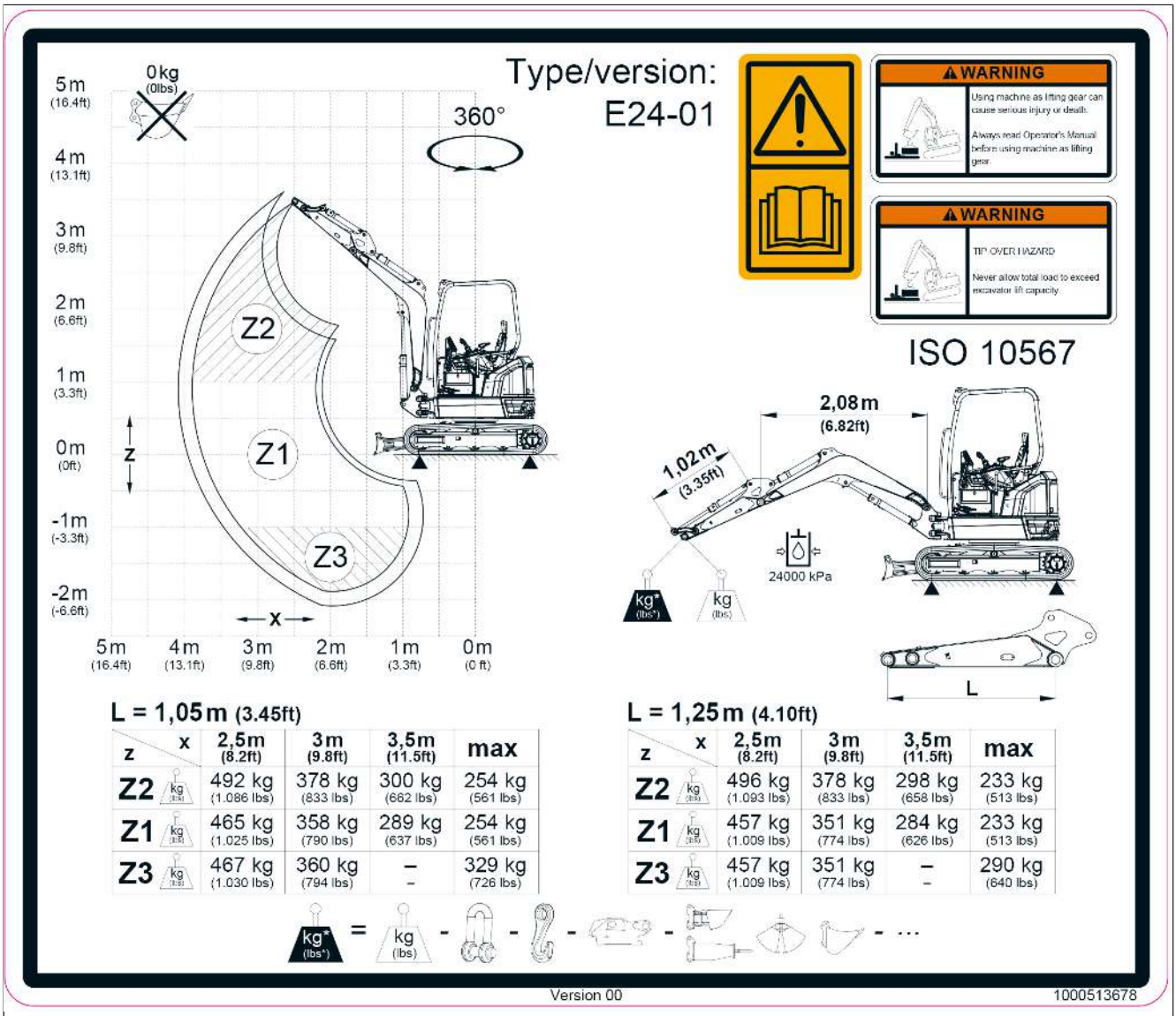

Fig. 287:

11

02 Rubber track 250mm/additional weight/canopy

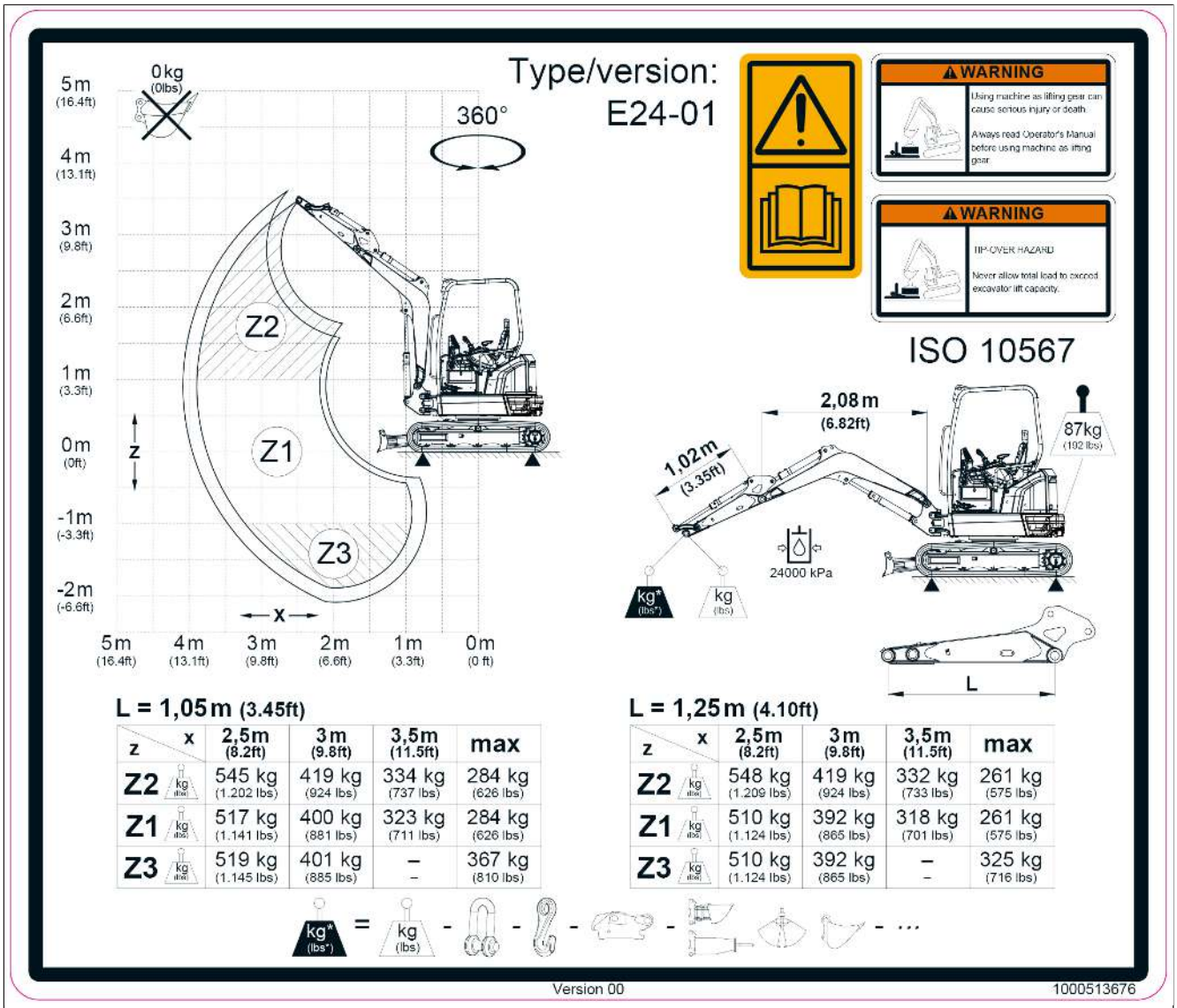

Fig. 288:

03 Rubber track 300mm/canopy

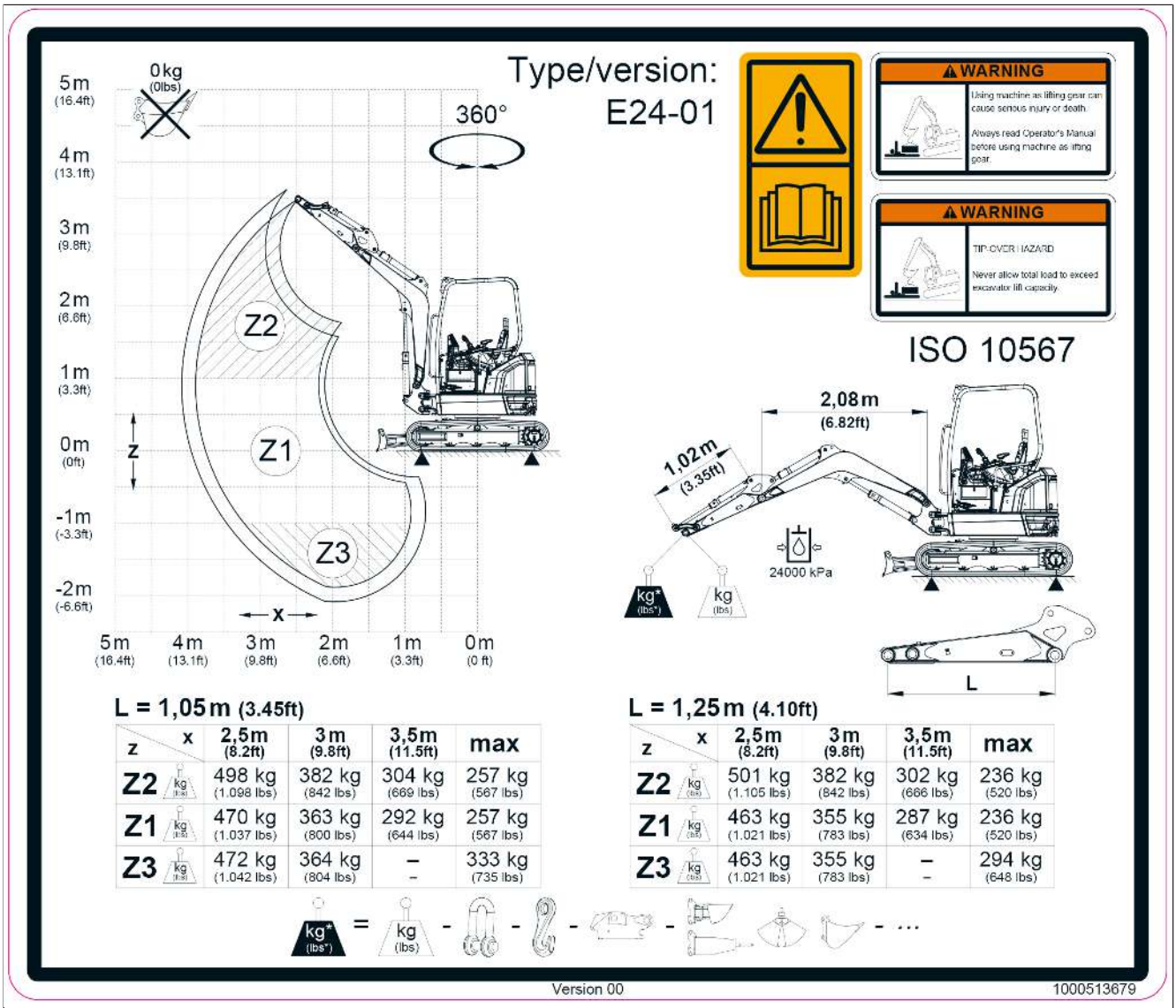

z \ x	2,5m (8.2ft)	3m (9.8ft)	3,5m (11.5ft)	max
Z2	498 kg (1.098 lbs)	382 kg (842 lbs)	304 kg (669 lbs)	257 kg (567 lbs)
Z1	470 kg (1.037 lbs)	363 kg (800 lbs)	292 kg (644 lbs)	257 kg (567 lbs)
Z3	472 kg (1.042 lbs)	364 kg (804 lbs)	– –	333 kg (735 lbs)

z \ x	2,5m (8.2ft)	3m (9.8ft)	3,5m (11.5ft)	max
Z2	501 kg (1.105 lbs)	382 kg (842 lbs)	302 kg (666 lbs)	236 kg (520 lbs)
Z1	463 kg (1.021 lbs)	355 kg (783 lbs)	287 kg (634 lbs)	236 kg (520 lbs)
Z3	463 kg (1.021 lbs)	355 kg (783 lbs)	– –	294 kg (648 lbs)

Fig. 289:

04 Rubber track 300mm/additional weight/canopy

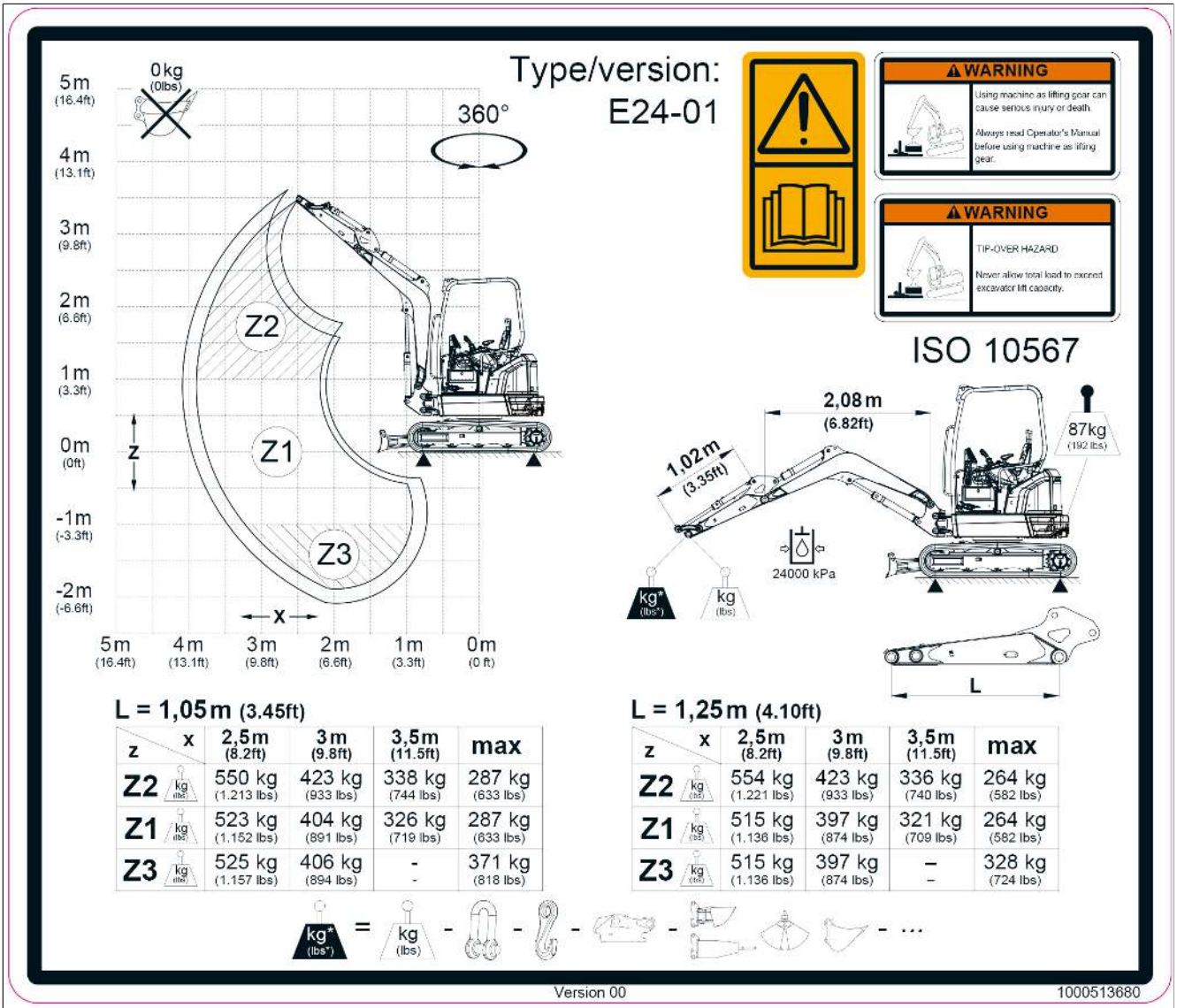

Fig. 290:

05 Steel track/canopy

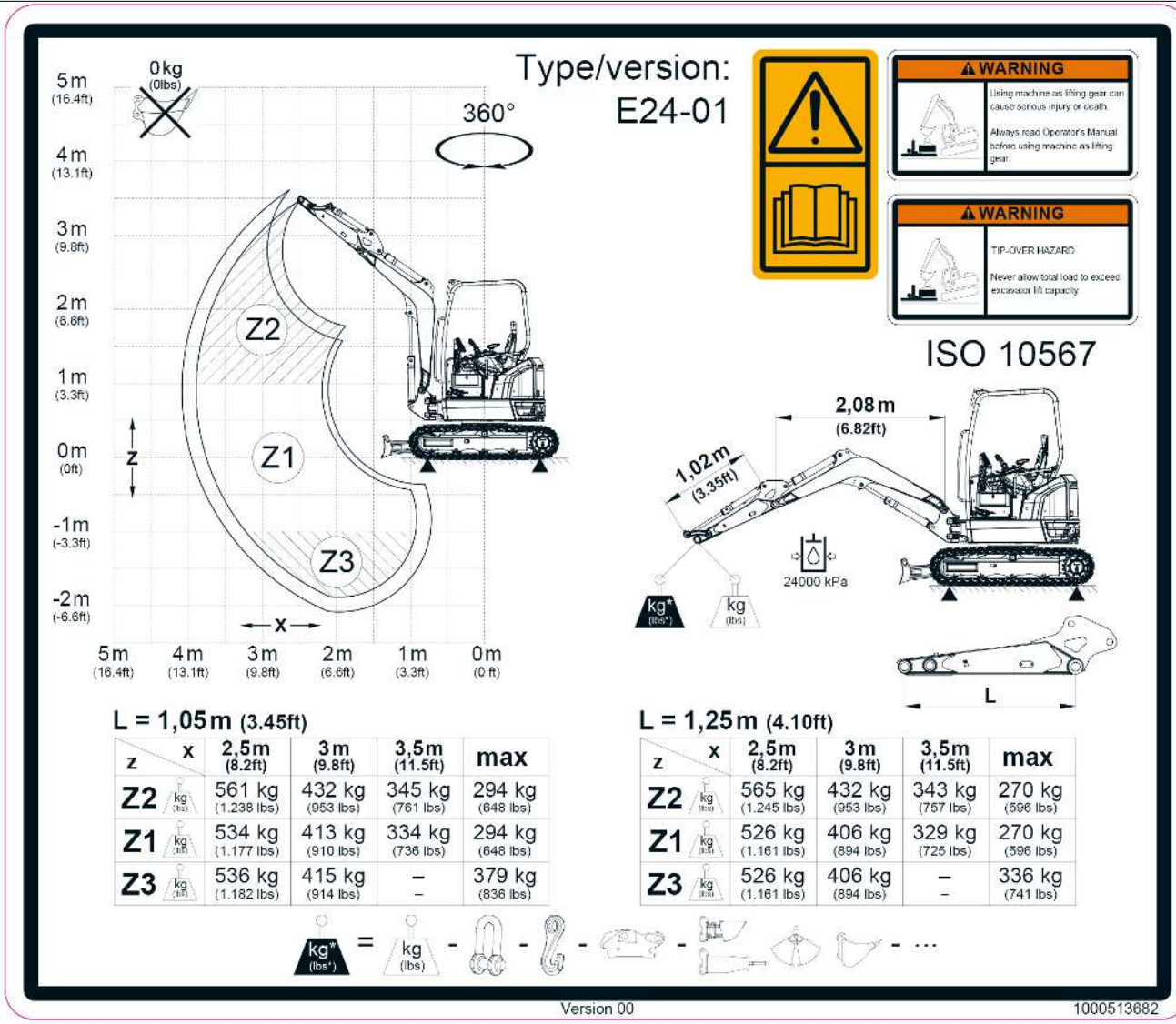

Fig. 291:

06 Steel track/additional weight/canopy

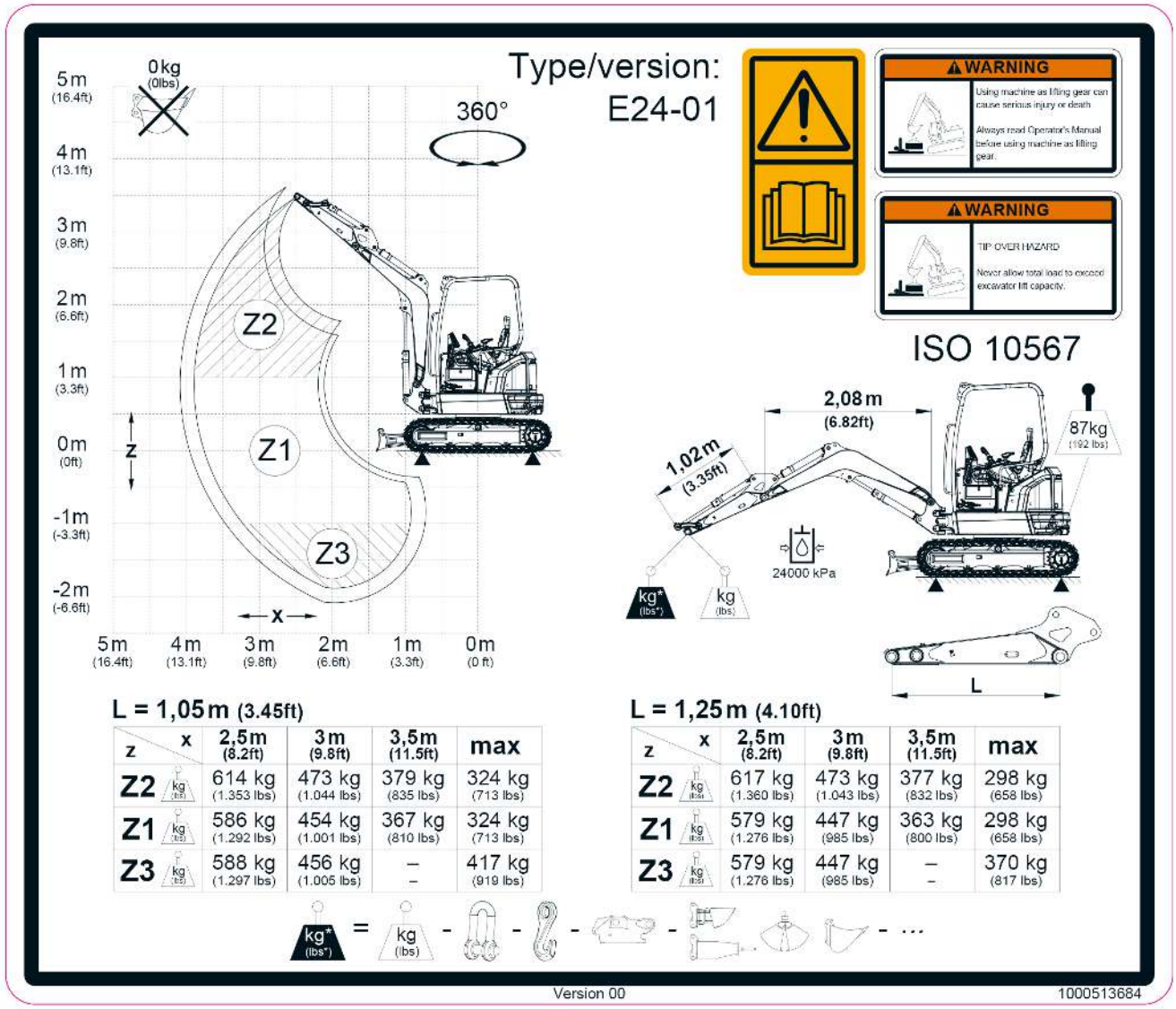

z \ x	2,5m (8.2ft)	3m (9.8ft)	3,5m (11.5ft)	max
Z2	614 kg (1.353 lbs)	473 kg (1.044 lbs)	379 kg (835 lbs)	324 kg (713 lbs)
Z1	586 kg (1.292 lbs)	454 kg (1.001 lbs)	367 kg (810 lbs)	324 kg (713 lbs)
Z3	588 kg (1.297 lbs)	456 kg (1.005 lbs)	– –	417 kg (919 lbs)

z \ x	2,5m (8.2ft)	3m (9.8ft)	3,5m (11.5ft)	max
Z2	617 kg (1.360 lbs)	473 kg (1.043 lbs)	377 kg (832 lbs)	298 kg (658 lbs)
Z1	579 kg (1.276 lbs)	447 kg (985 lbs)	363 kg (800 lbs)	298 kg (658 lbs)
Z3	579 kg (1.276 lbs)	447 kg (985 lbs)	– –	370 kg (817 lbs)

Fig. 292:

07 Rubber track 250mm/cab

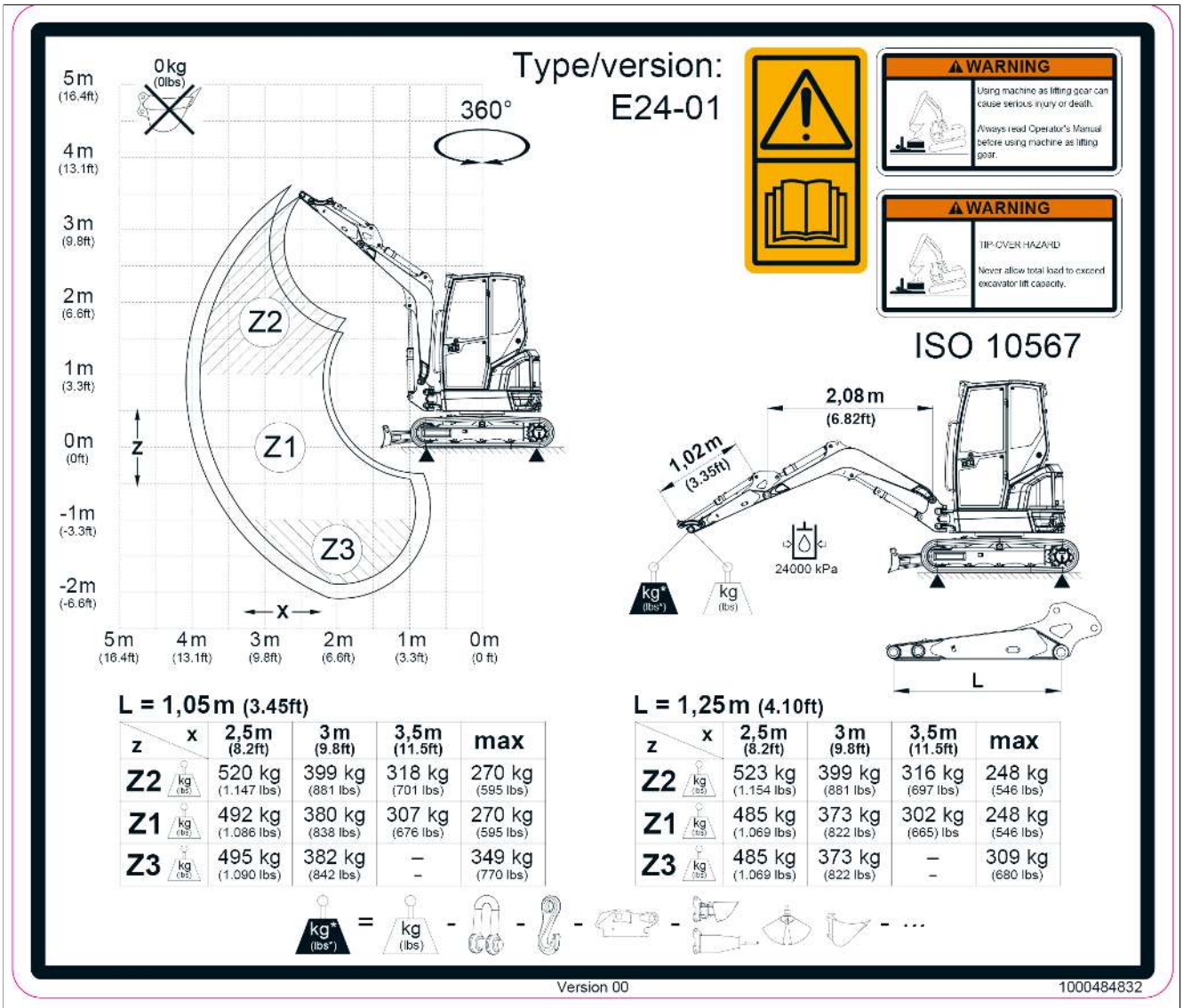

L = 1,05 m (3.45ft)

z \ x	2,5m (8.2ft)	3m (9.8ft)	3,5m (11.5ft)	max
Z2	520 kg (1.147 lbs)	399 kg (881 lbs)	318 kg (701 lbs)	270 kg (595 lbs)
Z1	492 kg (1.086 lbs)	380 kg (838 lbs)	307 kg (676 lbs)	270 kg (595 lbs)
Z3	495 kg (1.090 lbs)	382 kg (842 lbs)	– –	349 kg (770 lbs)

L = 1,25 m (4.10ft)

z \ x	2,5m (8.2ft)	3m (9.8ft)	3,5m (11.5ft)	max
Z2	523 kg (1.154 lbs)	399 kg (881 lbs)	316 kg (697 lbs)	248 kg (546 lbs)
Z1	485 kg (1.069 lbs)	373 kg (822 lbs)	302 kg (665) lbs	248 kg (546 lbs)
Z3	485 kg (1.069 lbs)	373 kg (822 lbs)	– –	309 kg (680 lbs)

kg* (lbs*) = kg (lbs) - - - - - ...

Fig. 293:

08 Rubber track 250mm/additional weight/cab

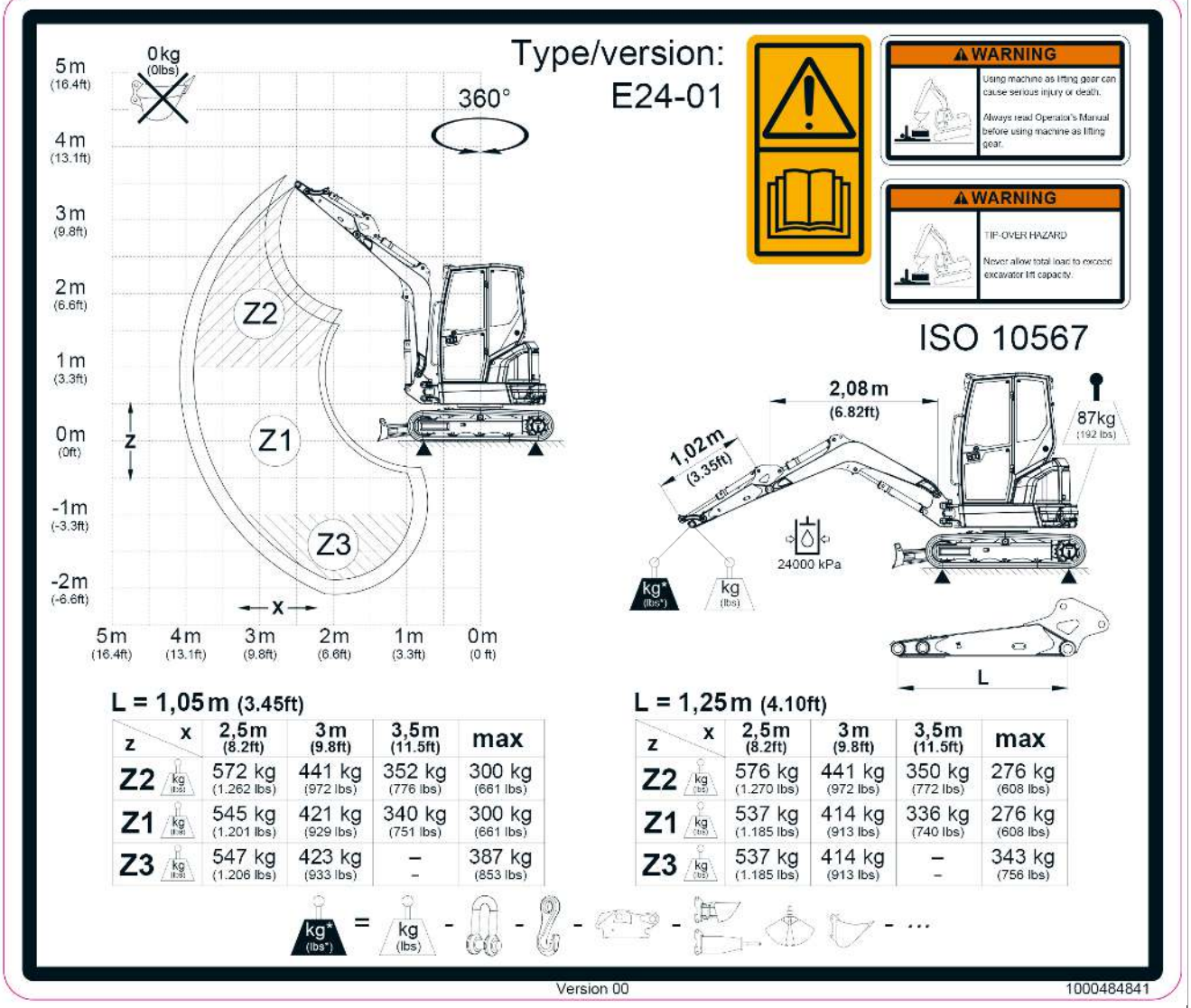

Fig. 294:

09 Rubber track 300mm/cab

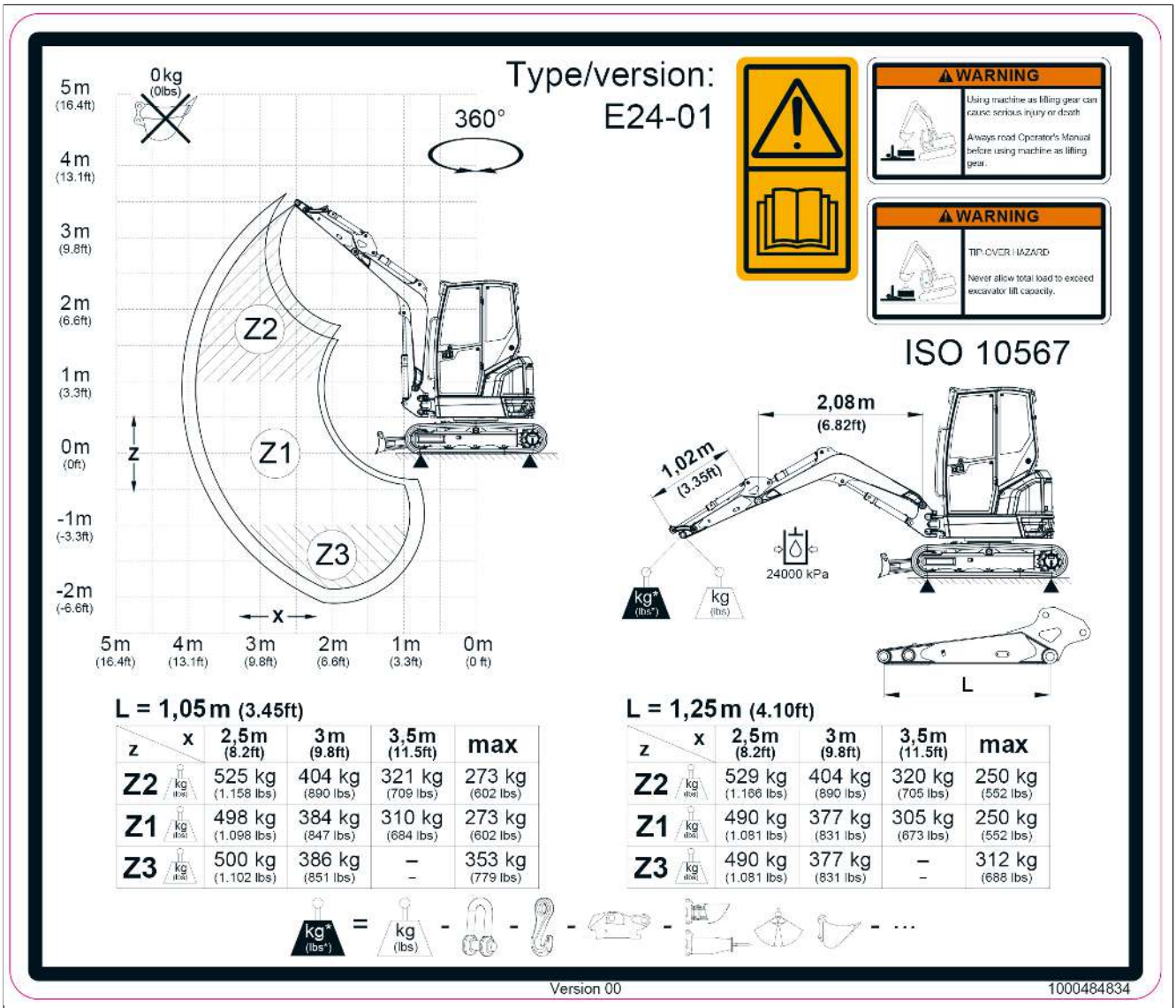

Fig. 295:

10 Rubber track 300mm/additional weight/cab

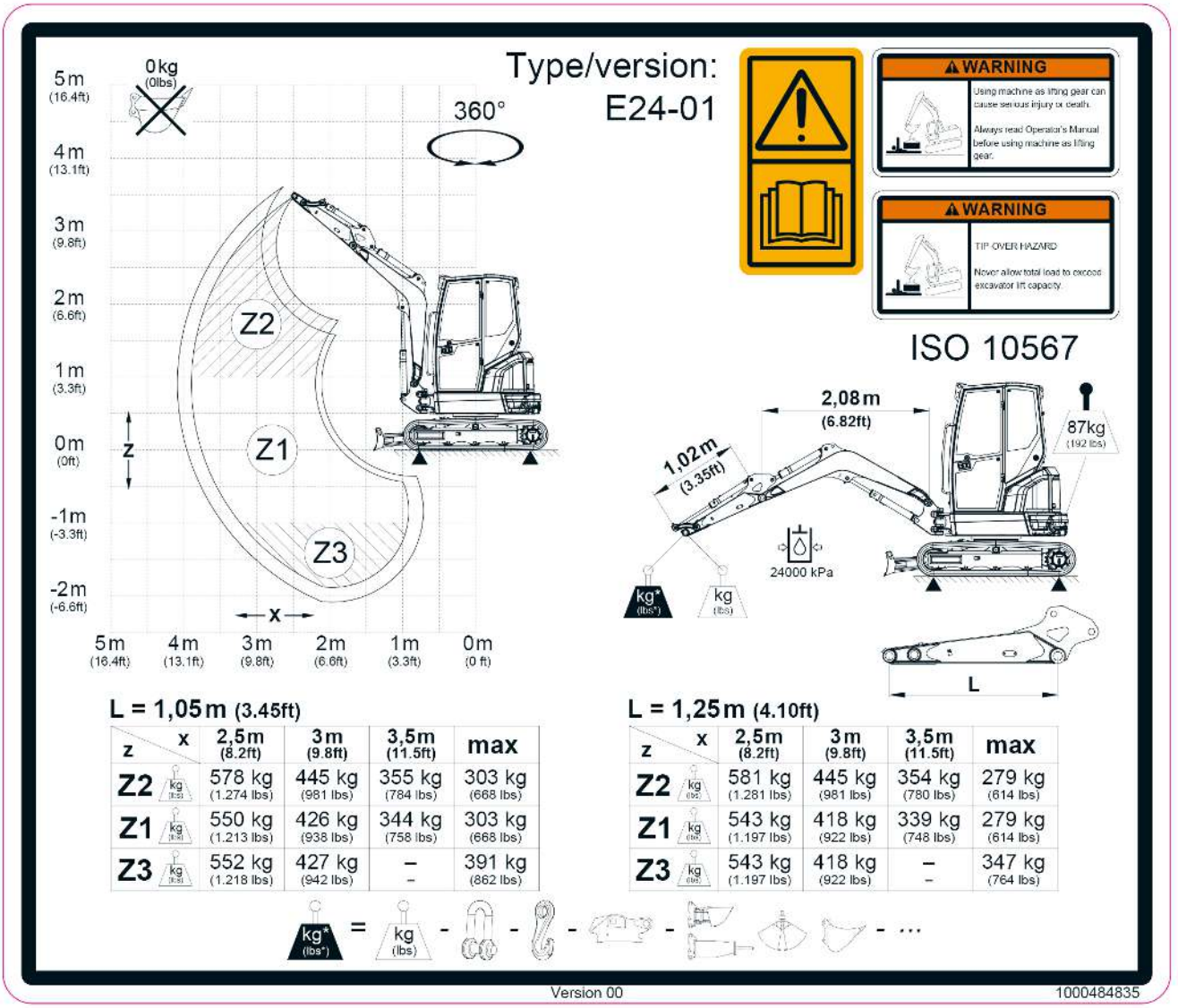

z \ x	2,5m (8.2ft)	3m (9.8ft)	3,5m (11.5ft)	max
Z2	578 kg (1.274 lbs)	445 kg (981 lbs)	355 kg (784 lbs)	303 kg (668 lbs)
Z1	550 kg (1.213 lbs)	426 kg (938 lbs)	344 kg (758 lbs)	303 kg (668 lbs)
Z3	552 kg (1.218 lbs)	427 kg (942 lbs)	– –	391 kg (862 lbs)

z \ x	2,5m (8.2ft)	3m (9.8ft)	3,5m (11.5ft)	max
Z2	581 kg (1.281 lbs)	445 kg (981 lbs)	354 kg (780 lbs)	279 kg (614 lbs)
Z1	543 kg (1.197 lbs)	418 kg (922 lbs)	339 kg (748 lbs)	279 kg (614 lbs)
Z3	543 kg (1.197 lbs)	418 kg (922 lbs)	– –	347 kg (764 lbs)

Fig. 296:

11 Steel track/cab

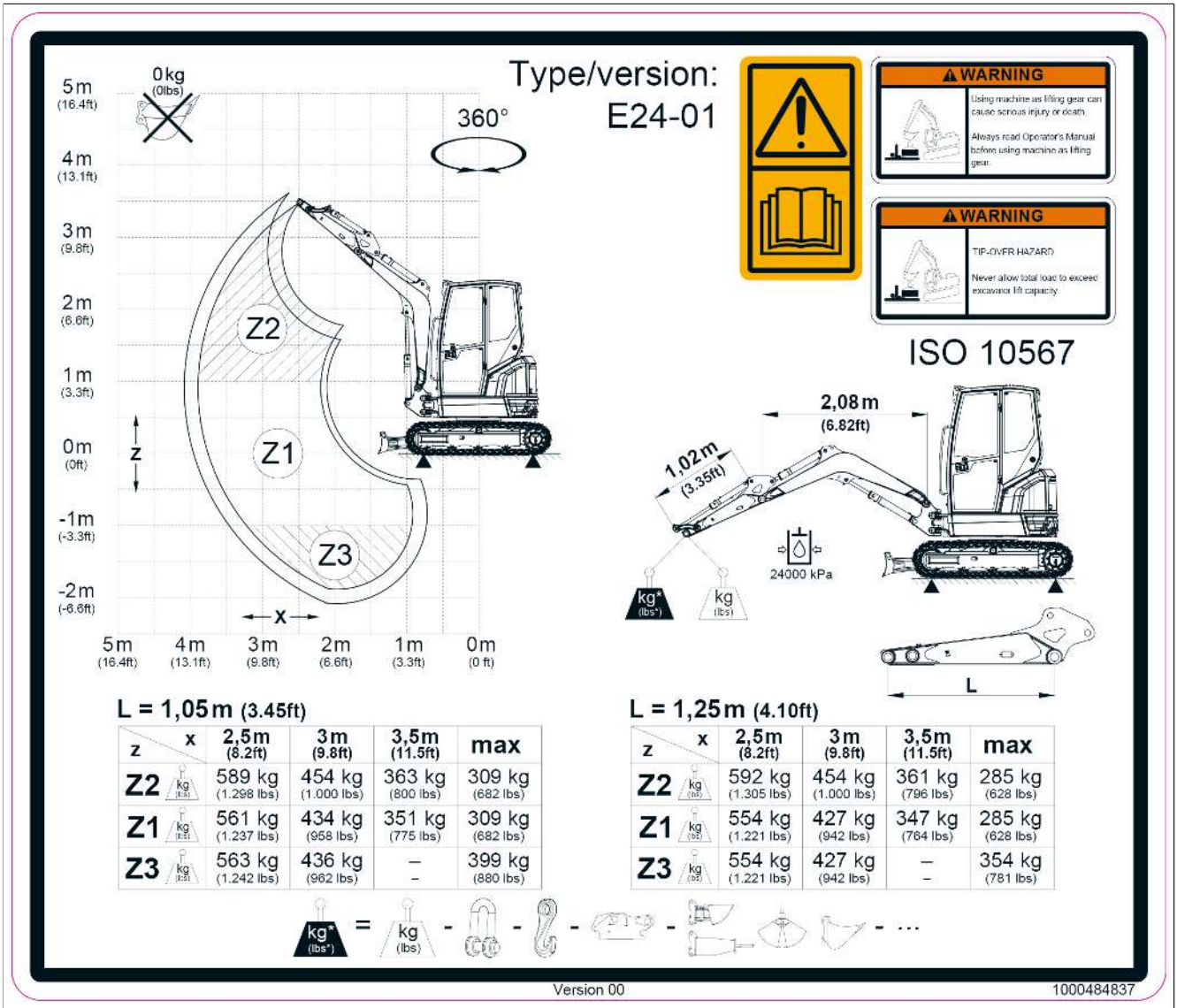

Fig. 297:

12 Steel track/additional weight/cab

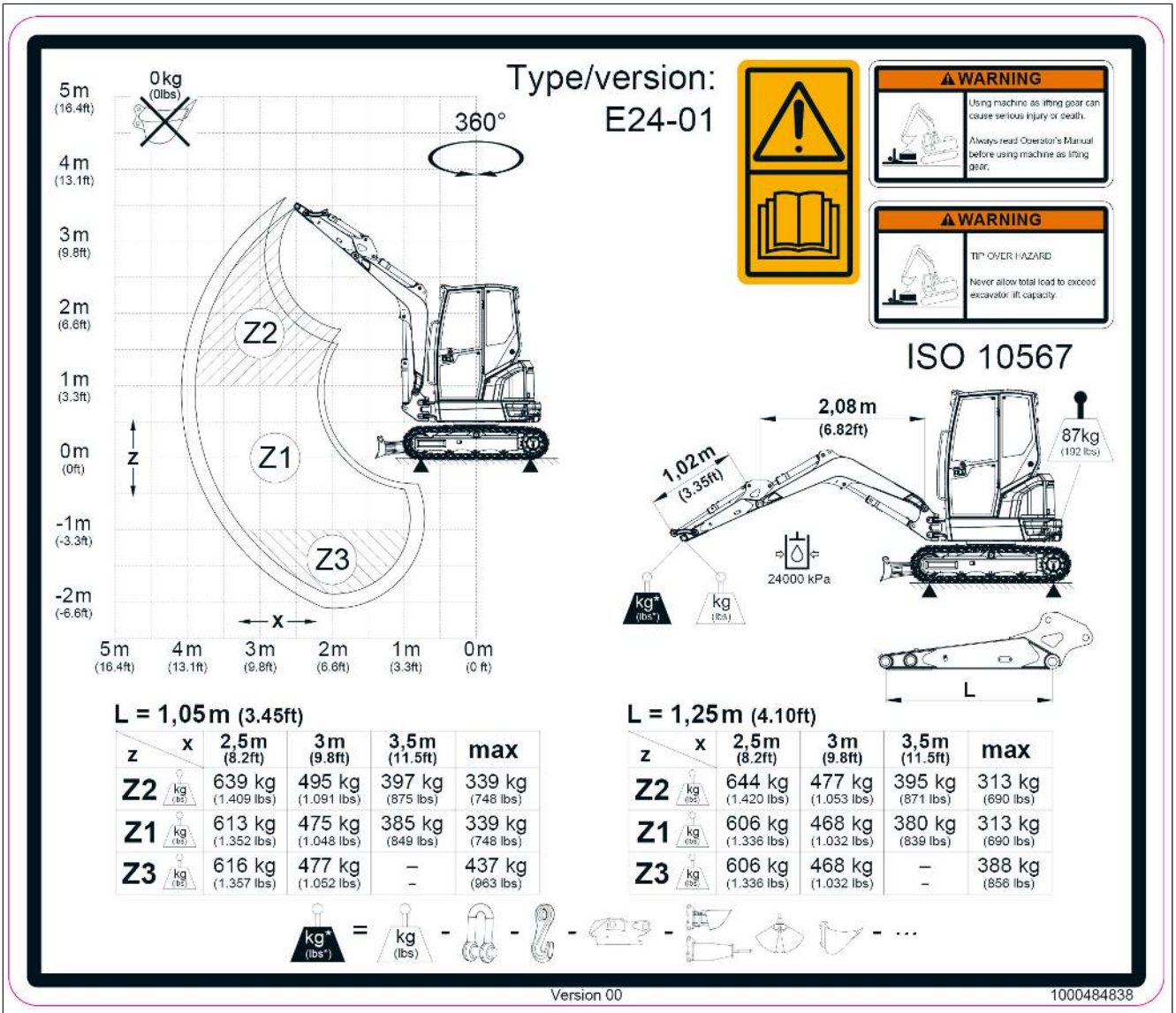

Fig. 298:

11.9 Lift capacity

⚠ WARNING

Crushing hazard due to the vehicle tipping over!

A tipping vehicle can cause serious injury or death.

- ► There must be no one in the danger zone or under the load.
- ► Do not exceed the weights indicated in the lifting capacity charts.
- ► Subtract the weight of the attachment and load from the weight in the relevant chart column.
- ► Take the density of the load into account.
- ► The ground must be horizontal, stable and even.

NOTICE

Damage caused by an overturning vehicle.

► Do not exceed the weights indicated in the lifting capacity charts.

Information

The values in the tables represent approximate values. The ground conditions can have a negative effect on the stability of the vehicle. The operator must take these influences into account.

Lifting capacity chart

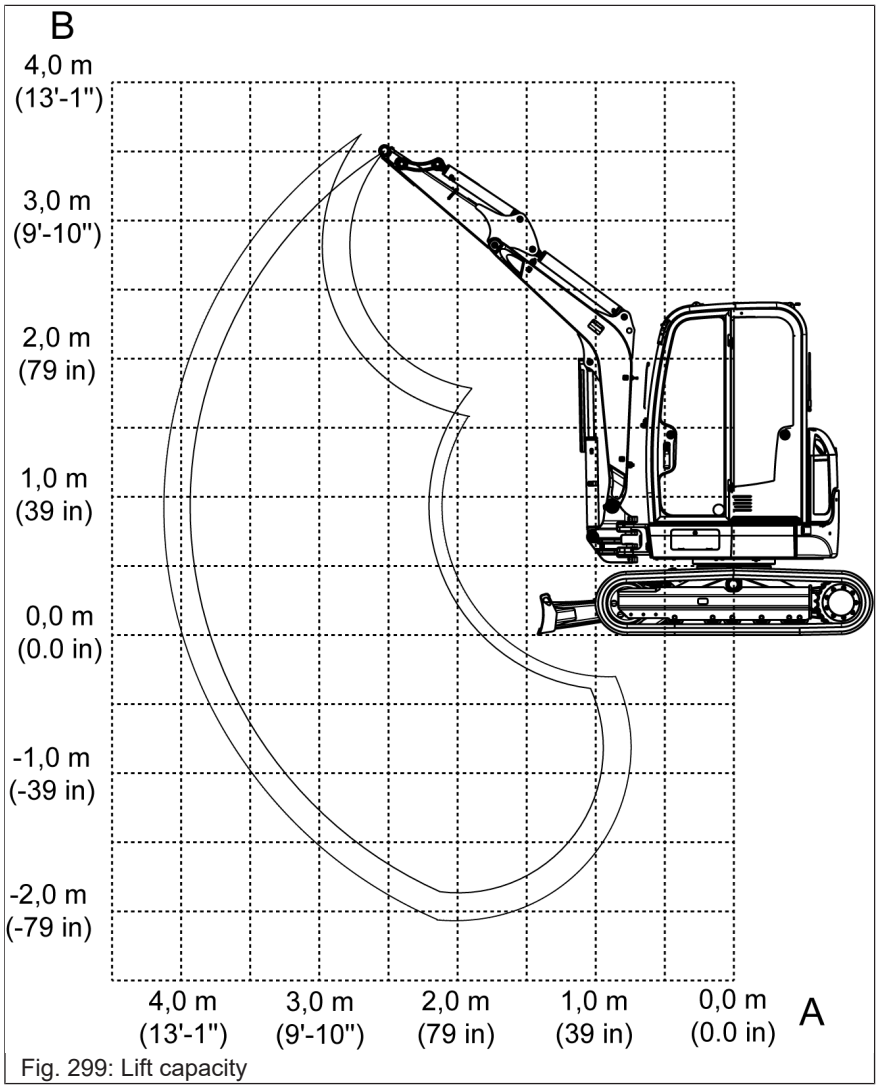

Fig. 299: Lift capacity

Designation	Explanation
A	Outreach of slewing ring center
B	Load hook height
max.	Permissible lifting capacity with extended boom
I	Uppercarriage in the direction of travel, dozer blade in front, dozer blade down, loss of ground contact due to dozer blade

Designation	Explanation
II	Uppercarriage 90° to the direction of travel, dozer blade at the top
III	Uppercarriage in the direction of travel, dozer blade in front, dozer blade up, loss of ground contact due to front axle
IV	Vehicle in the direction of travel, dozer blade rear, dozer blade up, loss of ground contact due to front axle

All table values are given in kg (lbs), in a horizontal position on a stable and level surface without a bucket or an attachment (e.g. hammer).

The lift capacity of the vehicle is limited by the setting of the relief valves and hydraulic power or by the safety against tipping.

Neither 75% of the static tipping load nor 87% of the hydraulic lift capacity is exceeded.

Calculation basis according to ISO 10567

Setting pressure on the boom cylinder:

24000 kPA (3,481 psi)

The lifting capacity applies to vehicles under the following conditions:

- Lubricants and operating fluids at the prescribed positions
- Full fuel tank
- Cabin or canopy, unless otherwise specified
- Vehicle at operating temperature
- Operator weight 75 kg (165 lbs)

Lifting capacity charts

01 Rubber track 250 mm/short dipper stick/cab

A / B	2 m (6' - 7")				2,5 m (8' - 2")				3 m (9' - 10")				3,5 m (11' - 6")				max			
	I	II	III	IV	I	II	III	IV	I	II	III	IV	I	II	III	IV	I	II	III	IV
3 m	--	--	--	--	--	--	--	--	552	436	519	552	--	--	--	--	563	416	496	563
(9' - 10")	--	--	--	--	--	--	--	--	(1,217)	(960)	(1,145)	(1,217)	--	--	--	--	(1,242)	(918)	(1,094)	(1,242)
2 m	--	--	--	--	634	572	634	634	574	427	511	574	545	332	396	467	545	302	361	427
(6' - 7")	--	--	--	--	(1,399)	(1,261)	(1,399)	(1,399)	(1,266)	(942)	(1,126)	(1,266)	(1,202)	(733)	(874)	(1,031)	(1,202)	(666)	(795)	(941)
1 m	--	--	--	--	933	520	634	748	721	399	481	569	608	318	381	452	552	270	323	385
(3' - 3")	--	--	--	--	(2,058)	(1,147)	(1,398)	(1,650)	(1,589)	(881)	(1,061)	(1,255)	(1,341)	(701)	(841)	(997)	(1,217)	(595)	(713)	(850)
0 m	1470	689	866	1030	1047	492	604	719	796	380	461	549	636	307	369	440	565	279	335	400
(0' - 0")	(3,241)	(1,520)	(1,910)	(2,272)	(2,308)	(1,086)	(1,333)	(1,585)	(1,755)	(838)	(1,016)	(1,210)	(1,403)	(676)	(814)	(971)	(1,245)	(615)	(739)	(882)
-1 m	1176	698	876	1040	882	495	607	721	663	382	463	550	--	--	--	--	562	349	421	501
-(3' - 3")	(2,593)	(1,540)	(1,932)	(2,294)	(1,945)	(1,090)	(1,338)	(1,590)	(1,462)	(842)	(1,020)	(1,214)	--	--	--	--	(1,240)	(770)	(929)	(1,105)
-2 m	--	--	--	--	--	--	--	--	--	--	--	--	--	--	--	--	--	--	--	--
-(6' - 7")	--	--	--	--	--	--	--	--	--	--	--	--	--	--	--	--	--	--	--	--
-3 m	--	--	--	--	--	--	--	--	--	--	--	--	--	--	--	--	--	--	--	--
-(9' - 10")	--	--	--	--	--	--	--	--	--	--	--	--	--	--	--	--	--	--	--	--

02 Rubber track 250 mm/long dipper stick/cab

A / B	2 m (6' - 7")				2,5 m (8' - 2")				3 m (9' - 10")				3,5 m (11' - 6")				max			
	I	II	III	IV	I	II	III	IV	I	II	III	IV	I	II	III	IV	I	II	III	IV
3 m	--	--	--	--	--	--	--	--	474	441	474	474	--	--	--	--	510	365	435	510
(9' - 10")	--	--	--	--	--	--	--	--	(1,045)	(973)	(1,045)	(1,045)	--	--	--	--	(1,124)	(805)	(959)	(1,124)
2 m	--	--	--	--	--	--	--	--	521	430	513	521	501	333	397	468	501	275	329	391
(6' - 7")	--	--	--	--	--	--	--	--	(1,148)	(947)	(1,132)	(1,148)	(1,104)	(734)	(876)	(1,033)	(1,104)	(607)	(725)	(862)
1 m	--	--	--	--	870	523	638	752	681	399	482	569	580	316	380	451	510	248	297	356
(3' - 3")	--	--	--	--	(1,918)	(1,154)	(1,406)	(1,659)	(1,502)	(881)	(1,062)	(1,255)	(1,279)	(697)	(837)	(994)	(1,124)	(546)	(656)	(784)
0 m	1500	682	858	1022	1039	488	600	714	786	376	457	545	633	302	365	436	524	254	306	367
(0' - 0")	(3,308)	(1,503)	(1,893)	(2,255)	(2,290)	(1,076)	(1,323)	(1,575)	(1,734)	(829)	(1,007)	(1,201)	(1,395)	(665)	(804)	(961)	(1,156)	(560)	(675)	(809)
-1 m	1271	686	863	1027	933	485	597	711	710	373	454	541	--	--	--	--	531	309	373	445
-(3' - 3")	(2,802)	(1,512)	(1,902)	(2,264)	(2,057)	(1,069)	(1,316)	(1,568)	(1,567)	(822)	(1000)	(1,193)	--	--	--	--	(1,171)	(680)	(822)	(981)
-2 m	552	552	552	552	--	--	--	--	--	--	--	--	--	--	--	--	424	424	424	424
-(6' - 7")	(1,217)	(1,217)	(1,217)	(1,217)	--	--	--	--	--	--	--	--	--	--	--	--	(934)	(934)	(934)	(934)
-3 m	--	--	--	--	--	--	--	--	--	--	--	--	--	--	--	--	--	--	--	--
-(9' - 10")	--	--	--	--	--	--	--	--	--	--	--	--	--	--	--	--	--	--	--	--

03 Rubber track 250 mm/additional weight/short dipper stick/ cab

A / B	2 m (6' - 7")				2,5 m (8' - 2")				3 m (9' - 10")				3,5 m (11' - 6")				max			
	I	II	III	IV	I	II	III	IV	I	II	III	IV	I	II	III	IV	I	II	III	IV
3 m	--	--	--	--	--	--	--	--	552	477	552	552	--	--	--	--	563	456	542	563
(9' - 10")	--	--	--	--	--	--	--	--	(1,217)	(1,051)	(1,217)	(1,217)	--	--	--	--	(1,242)	(1,006)	(1,194)	(1,242)
2 m	--	--	--	--	634	624	634	634	574	469	558	574	545	366	435	506	545	334	396	463
(6' - 7")	--	--	--	--	(1,399)	(1,376)	(1,399)	(1,399)	(1,266)	(1,033)	(1,230)	(1,266)	(1,202)	(808)	(958)	(1,116)	(1,202)	(736)	(874)	(1,021)
1 m	--	--	--	--	933	572	694	810	721	441	528	617	608	352	419	491	552	300	357	419
(3' - 3")	--	--	--	--	(2,058)	(1,262)	(1,531)	(1,786)	(1,589)	(972)	(1,165)	(1,360)	(1,341)	(776)	(925)	(1,083)	(1,217)	(661)	(787)	(924)
0 m	1470	761	951	1117	1047	545	665	780	796	421	508	596	636	340	408	479	565	310	370	436
(0' - 0")	(3,241)	(1,678)	(2,098)	(2,463)	(2,308)	(1,201)	(1,466)	(1,720)	(1,755)	(929)	(1,120)	(1,314)	(1,403)	(751)	(899)	(1,056)	(1,245)	(684)	(816)	(960)
-1 m	1176	770	961	1127	882	547	667	782	663	423	510	598	--	--	--	--	562	387	464	544
-(3' - 3")	(2,593)	(1,699)	(2,120)	(2,485)	(1,945)	(1,206)	(1,471)	(1,725)	(1,462)	(933)	(1,124)	(1,318)	--	--	--	--	(1,240)	(853)	(1,024)	(1,200)
-2 m	--	--	--	--	--	--	--	--	--	--	--	--	--	--	--	--	--	--	--	--
-(6' - 7")	--	--	--	--	--	--	--	--	--	--	--	--	--	--	--	--	--	--	--	--
-3 m	--	--	--	--	--	--	--	--	--	--	--	--	--	--	--	--	--	--	--	--
-(9' - 10")	--	--	--	--	--	--	--	--	--	--	--	--	--	--	--	--	--	--	--	--

04 Rubber track 250 mm/additional weight/long dipper stick/ cab

A / B	2 m (6' - 7")				2,5 m (8' - 2")				3 m (9' - 10")				3,5 m (11' - 6")				max			
	I	II	III	IV	I	II	III	IV	I	II	III	IV	I	II	III	IV	I	II	III	IV
3 m	--	--	--	--	--	--	--	--	474	474	474	474	--	--	--	--	510	401	476	510
(9' - 10")	--	--	--	--	--	--	--	--	(1,045)	(1,045)	(1,045)	(1,045)	--	--	--	--	(1,124)	(885)	(1,050)	(1,124)
2 m	--	--	--	--	--	--	--	--	521	471	521	521	501	367	436	501	501	305	362	425
(6' - 7")	--	--	--	--	--	--	--	--	(1,148)	(1,038)	(1,148)	(1,148)	(1,104)	(809)	(960)	(1,104)	(1,104)	(672)	(799)	(936)
1 m	--	--	--	--	870	576	698	814	681	441	528	617	580	350	418	490	510	276	329	387
(3' - 3")	--	--	--	--	(1,918)	(1,270)	(1,540)	(1,795)	(1,502)	(972)	(1,165)	(1,360)	(1,279)	(772)	(922)	(1,079)	(1,124)	(608)	(725)	(854)
0 m	1500	754	944	1109	1039	540	661	776	786	417	504	592	633	336	403	474	524	283	339	400
(0' - 0")	(3,308)	(1,662)	(2,081)	(2,446)	(2,290)	(1,192)	(1,457)	(1,711)	(1,734)	(920)	(1,111)	(1,305)	(1,395)	(740)	(888)	(1,046)	(1,156)	(625)	(748)	(882)
-1 m	1271	758	948	1114	933	537	657	773	710	414	500	589	--	--	--	--	531	343	412	484
-(3' - 3")	(2,802)	(1,670)	(2,090)	(2,456)	(2,057)	(1,185)	(1,450)	(1,704)	(1,567)	(913)	(1,103)	(1,298)	--	--	--	--	(1,171)	(756)	(908)	(1,068)
-2 m	552	552	552	552	--	--	--	--	--	--	--	--	--	--	--	--	424	424	424	424
-(6' - 7")	(1,217)	(1,217)	(1,217)	(1,217)	--	--	--	--	--	--	--	--	--	--	--	--	(934)	(934)	(934)	(934)
-3 m	--	--	--	--	--	--	--	--	--	--	--	--	--	--	--	--	--	--	--	--
-(9' - 10")	--	--	--	--	--	--	--	--	--	--	--	--	--	--	--	--	--	--	--	--

05 Rubber track 250 mm/short dipper stick/canopy

A / B	2 m (6' - 7")				2,5 m (8' - 2")				3 m (9' - 10")				3,5 m (11' - 6")				max			
	I	II	III	IV	I	II	III	IV	I	II	III	IV	I	II	III	IV	I	II	III	IV
3 m	--	--	--	--	--	--	--	--	552	414	493	552	--	--	--	--	563	395	471	555
(9' - 10")	--	--	--	--	--	--	--	--	(1,217)	(913)	(1,087)	(1,217)	--	--	--	--	(1,242)	(872)	(1,038)	(1,224)
2 m	--	--	--	--	634	544	634	634	574	406	484	572	545	315	375	445	545	285	340	406
(6' - 7")	--	--	--	--	(1,399)	(1,200)	(1,399)	(1,399)	(1,266)	(895)	(1,068)	(1,260)	(1,202)	(694)	(826)	(982)	(1,202)	(629)	(750)	(896)
1 m	--	--	--	--	933	492	600	713	721	378	455	542	608	300	360	430	552	254	305	366
(3' - 3")	--	--	--	--	(2,058)	(1,086)	(1,322)	(1,573)	(1,589)	(833)	(1,003)	(1,195)	(1,341)	(662)	(793)	(949)	(1,217)	(561)	(671)	(807)
0 m	1470	651	818	981	1047	465	570	684	796	358	434	522	636	289	348	418	565	262	315	380
(0' - 0")	(3,241)	(1,436)	(1,803)	(2,163)	(2,308)	(1,025)	(1,257)	(1,508)	(1,755)	(790)	(958)	(1,150)	(1,403)	(637)	(767)	(922)	(1,245)	(579)	(696)	(838)
-1 m	1176	661	828	991	882	467	573	686	663	360	436	523	--	--	--	--	562	329	397	476
-(3' - 3")	(2,593)	(1,457)	(1,826)	(2,185)	(1,945)	(1,030)	(1,262)	(1,513)	(1,462)	(794)	(962)	(1,154)	--	--	--	--	(1,240)	(726)	(876)	(1,051)
-2 m	--	--	--	--	--	--	--	--	--	--	--	--	--	--	--	--	--	--	--	--
-(6' - 7")	--	--	--	--	--	--	--	--	--	--	--	--	--	--	--	--	--	--	--	--
-3 m	--	--	--	--	--	--	--	--	--	--	--	--	--	--	--	--	--	--	--	--
-(9' - 10")	--	--	--	--	--	--	--	--	--	--	--	--	--	--	--	--	--	--	--	--

06 Rubber track 250 mm/long dipper stick/ canopy

A / B	2 m (6' - 7")				2,5 m (8' - 2")				3 m (9' - 10")				3,5 m (11' - 6")				max			
	I	II	III	IV	I	II	III	IV	I	II	III	IV	I	II	III	IV	I	II	III	IV
3 m	--	--	--	--	--	--	--	--	474	420	474	474	--	--	--	--	510	346	412	488
(9' - 10")	--	--	--	--	--	--	--	--	(1,045)	(925)	(1,045)	(1,045)	--	--	--	--	(1,124)	(763)	(909)	(1,076)
2 m	--	--	--	--	--	--	--	--	521	408	487	521	501	315	376	446	501	260	310	372
(6' - 7")	--	--	--	--	--	--	--	--	(1,148)	(899)	(1,074)	(1,148)	(1,104)	(695)	(828)	(984)	(1,104)	(572)	(684)	(819)
1 m	--	--	--	--	870	496	604	718	681	378	455	542	580	298	358	429	510	233	280	337
(3' - 3")	--	--	--	--	(1,918)	(1,093)	(1,331)	(1,582)	(1,502)	(833)	(1,003)	(1,196)	(1,279)	(658)	(789)	(945)	(1,124)	(513)	(616)	(744)
0 m	1500	644	810	973	1039	460	566	680	786	354	430	517	633	284	343	414	524	239	288	348
(0' - 0")	(3,308)	(1,420)	(1,786)	(2,146)	(2,290)	(1,015)	(1,248)	(1,498)	(1,734)	(781)	(949)	(1,141)	(1,395)	(626)	(756)	(912)	(1,156)	(526)	(634)	(767)
-1 m	1271	648	814	978	933	457	563	676	710	351	427	514	--	--	--	--	531	290	351	423
-(3' - 3")	(2,802)	(1,428)	(1,796)	(2,155)	(2,057)	(1,009)	(1,241)	(1,491)	(1,567)	(774)	(942)	(1,134)	--	--	--	--	(1,171)	(640)	(773)	(932)
-2 m	552	552	552	552	--	--	--	--	--	--	--	--	--	--	--	--	424	424	424	424
-(6' - 7")	(1,217)	(1,217)	(1,217)	(1,217)	--	--	--	--	--	--	--	--	--	--	--	--	(934)	(934)	(934)	(934)
-3 m	--	--	--	--	--	--	--	--	--	--	--	--	--	--	--	--	--	--	--	--
-(9' - 10")	--	--	--	--	--	--	--	--	--	--	--	--	--	--	--	--	--	--	--	--

07 Rubber track 250 mm/additional weight/short dipper stick/ Canopy

A / B	2 m (6' - 7")				2,5 m (8' - 2")				3 m (9' - 10")				3,5 m (11' - 6")				max			
	I	II	III	IV	I	II	III	IV	I	II	III	IV	I	II	III	IV	I	II	III	IV
3 m	--	--	--	--	--	--	--	--	552	455	540	552	--	--	--	--	563	435	516	563
(9' - 10")	--	--	--	--	--	--	--	--	(1,217)	(1,004)	(1,190)	(1,217)	--	--	--	--	(1,242)	(960)	(1,138)	(1,242)
2 m	--	--	--	--	634	597	634	634	574	447	531	574	545	348	413	484	545	317	376	442
(6' - 7")	--	--	--	--	(1,399)	(1,316)	(1,399)	(1,399)	(1,266)	(986)	(1,171)	(1,266)	(1,202)	(768)	(910)	(1,068)	(1,202)	(699)	(829)	(975)
1 m	--	--	--	--	933	545	660	775	721	419	502	590	608	334	398	469	552	284	338	400
(3' - 3")	--	--	--	--	(2,058)	(1,202)	(1,456)	(1,709)	(1,589)	(924)	(1,106)	(1,300)	(1,341)	(737)	(877)	(1,034)	(1,217)	(626)	(745)	(882)
0 m	1470	723	903	1068	1047	517	631	745	796	400	481	569	636	323	386	457	565	294	350	415
(0' - 0")	(3,241)	(1,595)	(1,991)	(2,354)	(2,308)	(1,141)	(1,391)	(1,643)	(1,755)	(881)	(1,061)	(1,255)	(1,403)	(711)	(851)	(1,008)	(1,245)	(648)	(773)	(916)
-1 m	1176	733	913	1078	882	519	633	747	663	401	483	571	--	--	--	--	562	367	440	520
-(3' - 3")	(2,593)	(1,615)	(2,014)	(2,377)	(1,945)	(1,145)	(1,396)	(1,648)	(1,462)	(885)	(1,065)	(1,259)	--	--	--	--	(1,240)	(810)	(970)	(1,146)
-2 m	--	--	--	--	--	--	--	--	--	--	--	--	--	--	--	--	--	--	--	--
-(6' - 7")	--	--	--	--	--	--	--	--	--	--	--	--	--	--	--	--	--	--	--	--
-3 m	--	--	--	--	--	--	--	--	--	--	--	--	--	--	--	--	--	--	--	--
-(9' - 10")	--	--	--	--	--	--	--	--	--	--	--	--	--	--	--	--	--	--	--	--

08 Rubber track 250 mm/additional weight/long dipper stick/ Canopy

A / B	2 m (6' - 7")				2,5 m (8' - 2")				3 m (9' - 10")				3,5 m (11' - 6")				max			
	I	II	III	IV	I	II	III	IV	I	II	III	IV	I	II	III	IV	I	II	III	IV
3 m	--	--	--	--	--	--	--	--	474	461	474	474	--	--	--	--	510	382	453	510
(9' - 10")	--	--	--	--	--	--	--	--	(1,045)	(1,016)	(1,045)	(1,045)	--	--	--	--	(1,124)	(843)	(999)	(1,124)
2 m	--	--	--	--	--	--	--	--	521	449	521	521	501	349	414	485	501	289	343	405
(6' - 7")	--	--	--	--	--	--	--	--	(1,148)	(990)	(1,148)	(1,148)	(1,104)	(770)	(913)	(1,070)	(1,104)	(638)	(757)	(894)
1 m	--	--	--	--	870	548	664	779	681	419	502	590	580	332	396	468	510	261	311	369
(3' - 3")	--	--	--	--	(1,918)	(1,209)	(1,464)	(1,717)	(1,502)	(924)	(1,107)	(1,301)	(1,279)	(733)	(874)	(1,031)	(1,124)	(575)	(686)	(814)
0 m	1500	716	895	1060	1039	513	626	741	786	396	477	565	633	318	381	452	524	268	320	381
(0' - 0")	(3,308)	(1,578)	(1,974)	(2,337)	(2,290)	(1,131)	(1,381)	(1,634)	(1,734)	(872)	(1,052)	(1,246)	(1,395)	(701)	(841)	(997)	(1,156)	(591)	(707)	(841)
-1 m	1271	720	900	1064	933	510	623	738	710	392	474	562	--	--	--	--	531	325	390	462
-(3' - 3")	(2,802)	(1,587)	(1,984)	(2,347)	(2,057)	(1,124)	(1,374)	(1,627)	(1,567)	(865)	(1,045)	(1,238)	--	--	--	--	(1,171)	(716)	(859)	(1,019)
-2 m	552	552	552	552	--	--	--	--	--	--	--	--	--	--	--	--	424	424	424	424
-(6' - 7")	(1,217)	(1,217)	(1,217)	(1,217)	--	--	--	--	--	--	--	--	--	--	--	--	(934)	(934)	(934)	(934)
-3 m	--	--	--	--	--	--	--	--	--	--	--	--	--	--	--	--	--	--	--	--
-(9' - 10")	--	--	--	--	--	--	--	--	--	--	--	--	--	--	--	--	--	--	--	--

09 Rubber track 300 mm/short dipper stick/cab

A / B	2 m (6' - 7")				2,5 m (8' - 2")				3 m (9' - 10")				3,5 m (11' - 6")				max			
	I	II	III	IV	I	II	III	IV	I	II	III	IV	I	II	III	IV	I	II	III	IV
3 m	--	--	--	--	--	--	--	--	552	440	525	552	--	--	--	--	563	420	501	563
(9' - 10")	--	--	--	--	--	--	--	--	(1,217)	(970)	(1,157)	(1,217)	--	--	--	--	(1,242)	(927)	(1,106)	(1,242)
2 m	--	--	--	--	634	577	634	634	574	432	516	574	545	336	401	472	545	305	365	431
(6' - 7")	--	--	--	--	(1,399)	(1,273)	(1,399)	(1,399)	(1,266)	(952)	(1,138)	(1,266)	(1,202)	(741)	(883)	(1,040)	(1,202)	(673)	(804)	(950)
1 m	--	--	--	--	933	525	641	755	721	404	487	574	608	321	386	457	552	273	327	389
(3' - 3")	--	--	--	--	(2,058)	(1,158)	(1,413)	(1,666)	(1,589)	(890)	(1,073)	(1,267)	(1,341)	(709)	(850)	(1,007)	(1,217)	(602)	(721)	(858)
0 m	1470	697	876	1040	1047	498	611	726	796	384	466	554	636	310	374	445	565	282	339	404
(0' - 0")	(3,241)	(1,536)	(1,931)	(2,293)	(2,308)	(1,098)	(1,348)	(1,600)	(1,755)	(847)	(1,028)	(1,221)	(1,403)	(684)	(824)	(981)	(1,245)	(622)	(748)	(891)
-1 m	1176	706	886	1050	882	500	613	728	663	386	468	556	--	--	--	--	562	353	426	506
-(3' - 3")	(2,593)	(1,556)	(1,953)	(2,316)	(1,945)	(1,102)	(1,353)	(1,605)	(1,462)	(851)	(1,032)	(1,225)	--	--	--	--	(1,240)	(779)	(940)	(1,116)
-2 m	--	--	--	--	--	--	--	--	--	--	--	--	--	--	--	--	--	--	--	--
-(6' - 7")	--	--	--	--	--	--	--	--	--	--	--	--	--	--	--	--	--	--	--	--
-3 m	--	--	--	--	--	--	--	--	--	--	--	--	--	--	--	--	--	--	--	--
-(9' - 10")	--	--	--	--	--	--	--	--	--	--	--	--	--	--	--	--	--	--	--	--

10 Rubber track 300 mm/long dipper stick/cab

A / B	2 m (6' - 7")				2,5 m (8' - 2")				3 m (9' - 10")				3,5 m (11' - 6")				max			
	I	II	III	IV	I	II	III	IV	I	II	III	IV	I	II	III	IV	I	II	III	IV
3 m	--	--	--	--	--	--	--	--	474	446	474	474	--	--	--	--	510	369	440	510
(9' - 10")	--	--	--	--	--	--	--	--	(1,045)	(982)	(1,045)	(1,045)	--	--	--	--	(1,124)	(813)	(970)	(1,124)
2 m	--	--	--	--	--	--	--	--	521	434	519	521	501	337	402	473	501	278	333	395
(6' - 7")	--	--	--	--	--	--	--	--	(1,148)	(956)	(1,144)	(1,148)	(1,104)	(742)	(885)	(1,043)	(1,104)	(613)	(734)	(870)
1 m	--	--	--	--	870	529	645	759	681	404	487	575	580	320	384	455	510	250	301	359
(3' - 3")	--	--	--	--	(1,918)	(1,166)	(1,421)	(1,674)	(1,502)	(890)	(1,073)	(1,267)	(1,279)	(705)	(847)	(1,004)	(1,124)	(552)	(664)	(792)
0 m	1500	689	868	1032	1039	493	607	721	786	380	462	550	633	305	369	440	524	257	310	371
(0' - 0")	(3,308)	(1,519)	(1,914)	(2,276)	(2,290)	(1,088)	(1,338)	(1,591)	(1,734)	(838)	(1,019)	(1,212)	(1,395)	(673)	(813)	(970)	(1,156)	(567)	(683)	(817)
-1 m	1271	693	872	1037	933	490	604	718	710	377	459	546	--	--	--	--	531	312	377	449
-(3' - 3")	(2,802)	(1,528)	(1,923)	(2,286)	(2,057)	(1,081)	(1,331)	(1,583)	(1,567)	(831)	(1,012)	(1,205)	--	--	--	--	(1,171)	(688)	(831)	(991)
-2 m	552	552	552	552	--	--	--	--	--	--	--	--	--	--	--	--	424	424	424	424
-(6' - 7")	(1,217)	(1,217)	(1,217)	(1,217)	--	--	--	--	--	--	--	--	--	--	--	--	(934)	(934)	(934)	(934)
-3 m	--	--	--	--	--	--	--	--	--	--	--	--	--	--	--	--	--	--	--	--
-(9' - 10")	--	--	--	--	--	--	--	--	--	--	--	--	--	--	--	--	--	--	--	--

11 Rubber track 300 mm/additional weight/short dipper stick/ cab

A / B	2 m (6' - 7")				2,5 m (8' - 2")				3 m (9' - 10")				3,5 m (11' - 6")				max			
	I	II	III	IV	I	II	III	IV	I	II	III	IV	I	II	III	IV	I	II	III	IV
3 m	--	--	--	--	--	--	--	--	552	481	552	552	--	--	--	--	563	460	547	563
(9' - 10")	--	--	--	--	--	--	--	--	(1,217)	(1,061)	(1,217)	(1,217)	--	--	--	--	(1,242)	(1,015)	(1,206)	(1,242)
2 m	--	--	--	--	634	630	634	634	574	473	563	574	545	370	439	511	545	337	400	467
(6' - 7")	--	--	--	--	(1,399)	(1,388)	(1,399)	(1,399)	(1,266)	(1,043)	(1,241)	(1,266)	(1,202)	(815)	(968)	(1,126)	(1,202)	(743)	(883)	(1,030)
1 m	--	--	--	--	933	578	701	817	721	445	533	622	608	355	424	495	552	303	361	423
(3' - 3")	--	--	--	--	(2,058)	(1,274)	(1,546)	(1,801)	(1,589)	(981)	(1,176)	(1,371)	(1,341)	(784)	(934)	(1,092)	(1,217)	(668)	(795)	(933)
0 m	1470	769	961	1127	1047	550	672	787	796	426	513	601	636	344	412	483	565	313	374	440
(0' - 0")	(3,241)	(1,695)	(2,119)	(2,485)	(2,308)	(1,213)	(1,481)	(1,735)	(1,755)	(938)	(1,131)	(1,326)	(1,403)	(758)	(908)	(1,066)	(1,245)	(691)	(825)	(969)
-1 m	1176	778	971	1137	882	552	674	789	663	427	515	603	--	--	--	--	562	391	469	549
-(3' - 3")	(2,593)	(1,715)	(2,141)	(2,507)	(1,945)	(1,218)	(1,486)	(1,740)	(1,462)	(942)	(1,135)	(1,330)	--	--	--	--	(1,240)	(862)	(1,034)	(1,211)
-2 m	--	--	--	--	--	--	--	--	--	--	--	--	--	--	--	--	--	--	--	--
-(6' - 7")	--	--	--	--	--	--	--	--	--	--	--	--	--	--	--	--	--	--	--	--
-3 m	--	--	--	--	--	--	--	--	--	--	--	--	--	--	--	--	--	--	--	--
-(9' - 10")	--	--	--	--	--	--	--	--	--	--	--	--	--	--	--	--	--	--	--	--

12 Rubber track 300 mm/additional weight/long dipper stick/ cab

A / B	2 m (6' - 7")				2,5 m (8' - 2")				3 m (9' - 10")				3,5 m (11' - 6")				max			
	I	II	III	IV	I	II	III	IV	I	II	III	IV	I	II	III	IV	I	II	III	IV
3 m	--	--	--	--	--	--	--	--	474	474	474	474	--	--	--	--	510	405	481	510
(9' - 10")	--	--	--	--	--	--	--	--	(1,045)	(1,045)	(1,045)	(1,045)	--	--	--	--	(1,124)	(893)	(1,060)	(1,124)
2 m	--	--	--	--	--	--	--	--	521	475	521	521	501	370	440	501	501	308	366	428
(6' - 7")	--	--	--	--	--	--	--	--	(1,148)	(1,047)	(1,148)	(1,148)	(1,104)	(817)	(970)	(1,104)	(1,104)	(679)	(807)	(944)
1 m	--	--	--	--	870	581	705	821	681	445	534	622	580	354	422	494	510	279	332	391
(3' - 3")	--	--	--	--	(1,918)	(1,281)	(1,555)	(1,810)	(1,502)	(981)	(1,177)	(1,372)	(1,279)	(780)	(931)	(1,089)	(1,124)	(614)	(733)	(862)
0 m	1500	761	953	1119	1039	546	667	783	786	421	509	597	633	339	407	479	524	286	343	404
(0' - 0")	(3,308)	(1,678)	(2,102)	(2,467)	(2,290)	(1,204)	(1,472)	(1,726)	(1,734)	(929)	(1,122)	(1,317)	(1,395)	(748)	(898)	(1,056)	(1,156)	(631)	(756)	(890)
-1 m	1271	765	958	1123	933	543	664	780	710	418	506	594	--	--	--	--	531	347	416	489
-(3' - 3")	(2,802)	(1,687)	(2,111)	(2,477)	(2,057)	(1,197)	(1,465)	(1,719)	(1,567)	(922)	(1,115)	(1,310)	--	--	--	--	(1,171)	(764)	(917)	(1,078)
-2 m	552	552	552	552	--	--	--	--	--	--	--	--	--	--	--	--	424	424	424	424
-(6' - 7")	(1,217)	(1,217)	(1,217)	(1,217)	--	--	--	--	--	--	--	--	--	--	--	--	(934)	(934)	(934)	(934)
-3 m	--	--	--	--	--	--	--	--	--	--	--	--	--	--	--	--	--	--	--	--
-(9' - 10")	--	--	--	--	--	--	--	--	--	--	--	--	--	--	--	--	--	--	--	--

13 Rubber track 300 mm/short dipper stick/canopy

A / B	2 m (6' - 7")				2,5 m (8' - 2")				3 m (9' - 10")				3,5 m (11' - 6")				max			
	I	II	III	IV	I	II	III	IV	I	II	III	IV	I	II	III	IV	I	II	III	IV
3 m	--	--	--	--	--	--	--	--	552	418	498	552	--	--	--	--	563	399	476	560
(9' - 10")	--	--	--	--	--	--	--	--	(1,217)	(922)	(1,098)	(1,217)	--	--	--	--	(1,242)	(881)	(1,049)	(1,236)
2 m	--	--	--	--	634	550	634	634	574	410	490	574	545	318	379	450	545	289	344	410
(6' - 7")	--	--	--	--	(1,399)	(1,212)	(1,399)	(1,399)	(1,266)	(904)	(1,079)	(1,266)	(1,202)	(701)	(836)	(992)	(1,202)	(637)	(759)	(905)
1 m	--	--	--	--	933	498	607	720	721	382	460	547	608	304	364	435	552	257	308	370
(3' - 3")	--	--	--	--	(2,058)	(1,098)	(1,337)	(1,588)	(1,589)	(842)	(1,015)	(1,207)	(1,341)	(669)	(802)	(958)	(1,217)	(567)	(680)	(816)
0 m	1470	659	827	991	1047	470	577	691	796	363	440	527	636	292	352	423	565	266	319	384
(0' - 0")	(3,241)	(1,453)	(1,824)	(2,184)	(2,308)	(1,037)	(1,272)	(1,523)	(1,755)	(800)	(970)	(1,162)	(1,403)	(644)	(776)	(932)	(1,245)	(586)	(704)	(847)
-1 m	1176	668	838	1001	882	472	579	693	663	364	442	529	--	--	--	--	562	333	402	481
-(3' - 3")	(2,593)	(1,473)	(1,847)	(2,207)	(1,945)	(1,042)	(1,277)	(1,528)	(1,462)	(804)	(974)	(1,166)	--	--	--	--	(1,240)	(735)	(887)	(1,061)
-2 m	--	--	--	--	--	--	--	--	--	--	--	--	--	--	--	--	--	--	--	--
-(6' - 7")	--	--	--	--	--	--	--	--	--	--	--	--	--	--	--	--	--	--	--	--
-3 m	--	--	--	--	--	--	--	--	--	--	--	--	--	--	--	--	--	--	--	--
-(9' - 10")	--	--	--	--	--	--	--	--	--	--	--	--	--	--	--	--	--	--	--	--

14 Rubber track 300 mm/long dipper stick/ canopy

A / B	2 m (6' - 7")				2,5 m (8' - 2")				3 m (9' - 10")				3,5 m (11' - 6")				max			
	I	II	III	IV	I	II	III	IV	I	II	III	IV	I	II	III	IV	I	II	III	IV
3 m	--	--	--	--	--	--	--	--	474	424	474	474	--	--	--	--	510	350	417	492
(9' - 10")	--	--	--	--	--	--	--	--	(1,045)	(935)	(1,045)	(1,045)	--	--	--	--	(1,124)	(771)	(919)	(1,086)
2 m	--	--	--	--	--	--	--	--	521	412	492	521	501	319	380	451	501	263	314	375
(6' - 7")	--	--	--	--	--	--	--	--	(1,148)	(909)	(1,085)	(1,148)	(1,104)	(703)	(838)	(994)	(1,104)	(579)	(692)	(828)
1 m	--	--	--	--	870	501	610	724	681	382	460	548	580	302	362	433	510	236	283	341
(3' - 3")	--	--	--	--	(1,918)	(1,105)	(1,346)	(1,597)	(1,502)	(842)	(1,015)	(1,208)	(1,279)	(666)	(799)	(955)	(1,124)	(520)	(624)	(752)
0 m	1 500	651	820	983	1 039	466	573	686	786	359	436	523	633	287	347	418	524	242	291	352
(0' - 0")	(3,308)	(1,436)	(1,807)	(2,167)	(2,290)	(1,027)	(1,263)	(1,514)	(1,734)	(791)	(961)	(1,153)	(1,395)	(634)	(766)	(922)	(1,156)	(533)	(642)	(776)
-1 m	1 271	655	824	987	933	463	570	683	710	355	432	519	--	--	--	--	531	294	355	427
-(3' - 3")	(2,802)	(1,445)	(1,817)	(2,177)	(2,057)	(1,021)	(1,256)	(1,506)	(1,567)	(783)	(953)	(1,145)	--	--	--	--	(1,171)	(648)	(783)	(942)
-2 m	552	552	552	552	--	--	--	--	--	--	--	--	--	--	--	--	424	424	424	424
-(6' - 7")	(1,217)	(1,217)	(1,217)	(1,217)	--	--	--	--	--	--	--	--	--	--	--	--	(934)	(934)	(934)	(934)
-3 m	--	--	--	--	--	--	--	--	--	--	--	--	--	--	--	--	--	--	--	--
-(9' - 10")	--	--	--	--	--	--	--	--	--	--	--	--	--	--	--	--	--	--	--	--

15 Rubber track 300 mm/additional weight/short dipper stick/ canopy

A / B	2 m (6' - 7")				2,5 m (8' - 2")				3 m (9' - 10")				3,5 m (11' - 6")				max			
	I	II	III	IV	I	II	III	IV	I	II	III	IV	I	II	III	IV	I	II	III	IV
3 m	--	--	--	--	--	--	--	--	552	459	545	552	--	--	--	--	563	439	521	563
(9' - 10")	--	--	--	--	--	--	--	--	(1,217)	(1,013)	(1,202)	(1,217)	--	--	--	--	(1,242)	(969)	(1,149)	(1,242)
2 m	--	--	--	--	634	602	634	634	574	451	536	574	545	352	417	489	545	320	380	446
(6' - 7")	--	--	--	--	(1,399)	(1,328)	(1,399)	(1,399)	(1,266)	(995)	(1,183)	(1,266)	(1,202)	(776)	(920)	(1,077)	(1,202)	(707)	(838)	(984)
1 m	--	--	--	--	933	550	667	782	721	423	507	595	608	338	402	473	552	287	342	404
(3' - 3")	--	--	--	--	(2,058)	(1,213)	(1,471)	(1,724)	(1,589)	(933)	(1,118)	(1,312)	(1,341)	(744)	(887)	(1,044)	(1,217)	(633)	(754)	(890)
0 m	1470	731	913	1077	1047	523	637	752	796	404	487	574	636	326	390	461	565	297	354	419
(0' - 0")	(3,241)	(1,611)	(2,012)	(2,376)	(2,308)	(1,152)	(1,406)	(1,658)	(1,755)	(891)	(1,073)	(1,267)	(1,403)	(719)	(860)	(1,017)	(1,245)	(655)	(781)	(925)
-1 m	1176	740	923	1088	882	525	640	754	663	406	488	576	--	--	--	--	562	371	445	525
-(3' - 3")	(2,593)	(1,632)	(2,035)	(2,398)	(1,945)	(1,157)	(1,411)	(1,663)	(1,462)	(894)	(1,077)	(1,271)	--	--	--	--	(1,240)	(818)	(981)	(1,157)
-2 m	--	--	--	--	--	--	--	--	--	--	--	--	--	--	--	--	--	--	--	--
-(6' - 7")	--	--	--	--	--	--	--	--	--	--	--	--	--	--	--	--	--	--	--	--
-3 m	--	--	--	--	--	--	--	--	--	--	--	--	--	--	--	--	--	--	--	--
-(9' - 10")	--	--	--	--	--	--	--	--	--	--	--	--	--	--	--	--	--	--	--	--

16 Rubber track 300 mm/additional weight/long dipper stick/ canopy

A / B	2 m (6' - 7")				2,5 m (8' - 2")				3 m (9' - 10")				3,5 m (11' - 6")				max			
	I	II	III	IV	I	II	III	IV	I	II	III	IV	I	II	III	IV	I	II	III	IV
3 m	--	--	--	--	--	--	--	--	474	465	474	474	--	--	--	--	510	386	457	510
(9' - 10")	--	--	--	--	--	--	--	--	(1,045)	(1,026)	(1,045)	(1,045)	--	--	--	--	(1,124)	(851)	(1,009)	(1,124)
2 m	--	--	--	--	--	--	--	--	521	453	521	521	501	353	418	490	501	292	347	409
(6' - 7")	--	--	--	--	--	--	--	--	(1,148)	(1000)	(1,148)	(1,148)	(1,104)	(778)	(922)	(1,079)	(1,104)	(645)	(766)	(902)
1 m	--	--	--	--	870	554	671	786	681	423	507	595	580	336	401	472	510	264	315	373
(3' - 3")	--	--	--	--	(1,918)	(1,221)	(1,479)	(1,733)	(1,502)	(933)	(1,118)	(1,312)	(1,279)	(740)	(883)	(1,040)	(1,124)	(582)	(694)	(822)
0 m	1500	723	905	1070	1039	518	633	748	786	400	483	570	633	321	386	457	524	271	324	385
(0' - 0")	(3,308)	(1,595)	(1,995)	(2,359)	(2,290)	(1,143)	(1,396)	(1,649)	(1,734)	(881)	(1,064)	(1,258)	(1,395)	(709)	(850)	(1,007)	(1,156)	(598)	(715)	(849)
-1 m	1271	727	909	1074	933	515	630	745	710	397	479	567	--	--	--	--	531	328	394	466
-(3' - 3")	(2,802)	(1,603)	(2,005)	(2,368)	(2,057)	(1,136)	(1,389)	(1,642)	(1,567)	(874)	(1,057)	(1,250)	--	--	--	--	(1,171)	(724)	(869)	(1,028)
-2 m	552	552	552	552	--	--	--	--	--	--	--	--	--	--	--	--	424	424	424	424
-(6' - 7")	(1,217)	(1,217)	(1,217)	(1,217)	--	--	--	--	--	--	--	--	--	--	--	--	(934)	(934)	(934)	(934)
-3 m	--	--	--	--	--	--	--	--	--	--	--	--	--	--	--	--	--	--	--	--
-(9' - 10")	--	--	--	--	--	--	--	--	--	--	--	--	--	--	--	--	--	--	--	--

17 Steel track 300 mm/short dipper stick/cab

A / B	2 m (6' - 7")				2,5 m (8' - 2")				3 m (9' - 10")				3,5 m (11' - 6")				max			
	I	II	III	IV	I	II	III	IV	I	II	III	IV	I	II	III	IV	I	II	III	IV
3 m	--	--	--	--	--	--	--	--	556	490	556	556	--	--	--	--	568	469	568	568
(9' - 10")	--	--	--	--	--	--	--	--	(1,227)	(1,080)	(1,227)	(1,227)	--	--	--	--	(1,251)	(1,034)	(1,251)	(1,251)
2 m	--	--	--	--	639	639	639	639	579	482	579	579	549	377	473	527	549	344	432	482
(6' - 7")	--	--	--	--	(1,409)	(1,409)	(1,409)	(1,409)	(1,276)	(1,062)	(1,276)	(1,276)	(1,211)	(832)	(1,043)	(1,162)	(1,211)	(759)	(953)	(1,063)
1 m	--	--	--	--	941	589	757	843	726	454	576	642	613	363	458	512	556	309	390	437
(3' - 3")	--	--	--	--	(2,074)	(1,298)	(1,669)	(1,858)	(1,602)	(1,000)	(1,270)	(1,416)	(1,352)	(800)	(1,010)	(1,129)	(1,226)	(682)	(860)	(964)
0 m	1481	783	1042	1164	1055	561	727	813	802	434	555	622	641	351	446	500	569	320	405	455
(0' - 0")	(3,265)	(1,727)	(2,298)	(2,566)	(2,325)	(1,237)	(1,604)	(1,793)	(1,769)	(958)	(1,225)	(1,371)	(1,414)	(775)	(983)	(1,102)	(1,255)	(706)	(894)	(1,002)
-1 m	1185	792	1052	1174	889	563	730	815	668	436	557	623	--	--	--	--	567	399	507	567
-(3' - 3")	(2,613)	(1,747)	(2,320)	(2,588)	(1,959)	(1,242)	(1,609)	(1,798)	(1,474)	(962)	(1,229)	(1,375)	--	--	--	--	(1,249)	(880)	(1,119)	(1,249)
-2 m	--	--	--	--	--	--	--	--	--	--	--	--	--	--	--	--	--	--	--	--
-(6' - 7")	--	--	--	--	--	--	--	--	--	--	--	--	--	--	--	--	--	--	--	--
-3 m	--	--	--	--	--	--	--	--	--	--	--	--	--	--	--	--	--	--	--	--
-(9' - 10")	--	--	--	--	--	--	--	--	--	--	--	--	--	--	--	--	--	--	--	--

18 Steel track 300 mm/long dipper stick/cab

A / B	2 m (6' - 7")				2,5 m (8' - 2")				3 m (9' - 10")				3,5 m (11' - 6")				max			
	I	II	III	IV	I	II	III	IV	I	II	III	IV	I	II	III	IV	I	II	III	IV
3 m	--	--	--	--	--	--	--	--	477	477	477	477	--	--	--	--	513	413	513	513
(9' - 10")	--	--	--	--	--	--	--	--	(1,053)	(1,053)	(1,053)	(1,053)	--	--	--	--	(1,132)	(910)	(1,132)	(1,132)
2 m	--	--	--	--	--	--	--	--	525	484	525	525	504	378	474	504	504	314	396	443
(6' - 7")	--	--	--	--	--	--	--	--	(1,157)	(1,067)	(1,157)	(1,157)	(1,112)	(833)	(1,045)	(1,112)	(1,112)	(693)	(872)	(976)
1 m	--	--	--	--	876	592	761	847	686	454	576	642	584	361	456	510	514	285	360	405
(3' - 3")	--	--	--	--	(1,933)	(1,305)	(1,678)	(1,867)	(1,513)	(1,000)	(1,270)	(1,416)	(1,289)	(796)	(1,006)	(1,125)	(1,133)	(628)	(794)	(892)
0 m	1512	775	1034	1156	1047	557	723	809	792	430	551	618	638	347	441	495	528	293	372	418
(0' - 0")	(3,334)	(1,710)	(2,281)	(2,549)	(2,308)	(1,228)	(1,595)	(1,783)	(1,747)	(949)	(1,216)	(1,362)	(1,406)	(764)	(973)	(1,092)	(1,165)	(646)	(820)	(922)
-1 m	1280	779	1039	1160	940	554	720	806	716	427	548	614	--	--	--	--	535	354	451	505
-(3' - 3")	(2,823)	(1,719)	(2,291)	(2,558)	(2,073)	(1,221)	(1,587)	(1,776)	(1,579)	(942)	(1,208)	(1,354)	--	--	--	--	(1,180)	(781)	(994)	(1,115)
-2 m	556	556	556	556	--	--	--	--	--	--	--	--	--	--	--	--	427	427	427	427
-(6' - 7")	(1,226)	(1,226)	(1,226)	(1,226)	--	--	--	--	--	--	--	--	--	--	--	--	(942)	(942)	(942)	(942)
-3 m	--	--	--	--	--	--	--	--	--	--	--	--	--	--	--	--	--	--	--	--
-(9' - 10")	--	--	--	--	--	--	--	--	--	--	--	--	--	--	--	--	--	--	--	--

19 Steel track 300 mm/additional weight/short dipper stick/cab

A / B	2 m (6' - 7")				2,5 m (8' - 2")				3 m (9' - 10")				3,5 m (11' - 6")				max			
	I	II	III	IV	I	II	III	IV	I	II	III	IV	I	II	III	IV	I	II	III	IV
3 m	--	--	--	--	--	--	--	--	556	531	556	556	--	--	--	--	568	509	568	568
(9' - 10")	--	--	--	--	--	--	--	--	(1,227)	(1,170)	(1,227)	(1,227)	--	--	--	--	(1,251)	(1,122)	(1,251)	(1,251)
2 m	--	--	--	--	639	639	639	639	579	523	579	579	549	411	512	549	549	376	468	518
(6' - 7")	--	--	--	--	(1,409)	(1,409)	(1,409)	(1,409)	(1,276)	(1,152)	(1,276)	(1,276)	(1,211)	(906)	(1,128)	(1,211)	(1,211)	(829)	(1,032)	(1,143)
1 m	--	--	--	--	941	641	818	904	726	495	623	690	613	397	497	551	556	339	424	471
(3' - 3")	--	--	--	--	(2,074)	(1,413)	(1,805)	(1,994)	(1,602)	(1,091)	(1,374)	(1,521)	(1,352)	(875)	(1,095)	(1,214)	(1,226)	(748)	(935)	(1,039)
0 m	1481	855	1129	1250	1055	613	789	874	802	475	603	669	641	385	485	539	569	351	441	490
(0' - 0")	(3,265)	(1,885)	(2,489)	(2,757)	(2,325)	(1,352)	(1,739)	(1,928)	(1,769)	(1,048)	(1,329)	(1,475)	(1,414)	(849)	(1,069)	(1,188)	(1,255)	(774)	(972)	(1,081)
-1 m	1185	864	1139	1185	889	616	791	877	668	477	605	668	--	--	--	--	567	437	551	567
-(3' - 3")	(2,613)	(1,905)	(2,512)	(2,613)	(1,959)	(1,357)	(1,744)	(1,933)	(1,474)	(1,052)	(1,333)	(1,474)	--	--	--	--	(1,249)	(963)	(1,214)	(1,249)
-2 m	--	--	--	--	--	--	--	--	--	--	--	--	--	--	--	--	--	--	--	--
-(6' - 7")	--	--	--	--	--	--	--	--	--	--	--	--	--	--	--	--	--	--	--	--
-3 m	--	--	--	--	--	--	--	--	--	--	--	--	--	--	--	--	--	--	--	--
-(9' - 10")	--	--	--	--	--	--	--	--	--	--	--	--	--	--	--	--	--	--	--	--

20 Steel track 300 mm/additional weight/long dipper stick/cab

A / B	2 m (6' - 7")				2,5 m (8' - 2")				3 m (9' - 10")				3,5 m (11' - 6")				max			
	I	II	III	IV	I	II	III	IV	I	II	III	IV	I	II	III	IV	I	II	III	IV
3 m	--	--	--	--	--	--	--	--	477	477	477	477	--	--	--	--	513	449	513	513
(9' - 10")	--	--	--	--	--	--	--	--	(1,053)	(1,053)	(1,053)	(1,053)	--	--	--	--	(1,132)	(990)	(1,132)	(1,132)
2 m	--	--	--	--	--	--	--	--	525	525	525	525	504	412	504	504	504	344	429	476
(6' - 7")	--	--	--	--	--	--	--	--	(1,157)	(1,157)	(1,157)	(1,157)	(1,112)	(908)	(1,112)	(1,112)	(1,112)	(759)	(947)	(1,050)
1 m	--	--	--	--	876	644	822	876	686	495	624	686	584	395	495	549	514	313	392	436
(3' - 3")	--	--	--	--	(1,933)	(1,420)	(1,813)	(1,933)	(1,513)	(1,091)	(1,375)	(1,513)	(1,289)	(871)	(1,092)	(1,211)	(1,133)	(690)	(864)	(962)
0 m	1512	847	1121	1243	1047	609	784	870	792	471	599	665	638	380	480	534	528	322	405	451
(0' - 0")	(3,334)	(1,868)	(2,472)	(2,740)	(2,308)	(1,343)	(1,730)	(1,919)	(1,747)	(1,039)	(1,320)	(1,466)	(1,406)	(839)	(1,058)	(1,177)	(1,165)	(710)	(893)	(995)
-1 m	1280	851	1126	1247	940	606	781	867	716	468	595	662	--	--	--	--	535	388	490	535
-(3' - 3")	(2,823)	(1,877)	(2,482)	(2,750)	(2,073)	(1,336)	(1,723)	(1,912)	(1,579)	(1,032)	(1,313)	(1,459)	--	--	--	--	(1,180)	(856)	(1,080)	(1,180)
-2 m	556	556	556	556	--	--	--	--	--	--	--	--	--	--	--	--	427	427	427	427
-(6' - 7")	(1,226)	(1,226)	(1,226)	(1,226)	--	--	--	--	--	--	--	--	--	--	--	--	(942)	(942)	(942)	(942)
-3 m	--	--	--	--	--	--	--	--	--	--	--	--	--	--	--	--	--	--	--	--
-(9' - 10")	--	--	--	--	--	--	--	--	--	--	--	--	--	--	--	--	--	--	--	--

21 Steel track 300 mm/short dipper stick/ canopy

A / B	2 m (6' - 7")				2,5 m (8' - 2")				3 m (9' - 10")				3,5 m (11' - 6")				max			
	I	II	III	IV	I	II	III	IV	I	II	III	IV	I	II	III	IV	I	II	III	IV
3 m	--	--	--	--	--	--	--	--	556	468	556	556	--	--	--	--	568	448	562	568
(9' - 10")	--	--	--	--	--	--	--	--	(1,227)	(1,033)	(1,227)	(1,227)	--	--	--	--	(1,251)	(988)	(1,239)	(1,251)
2 m	--	--	--	--	639	613	639	639	579	460	578	579	549	359	451	505	549	328	411	462
(6' - 7")	--	--	--	--	(1,409)	(1,352)	(1,409)	(1,409)	(1,276)	(1,015)	(1,275)	(1,276)	(1,211)	(793)	(994)	(1,113)	(1,211)	(722)	(907)	(1,018)
1 m	--	--	--	--	941	561	722	808	726	432	549	615	613	345	436	490	556	294	371	418
(3' - 3")	--	--	--	--	(2,074)	(1,238)	(1,592)	(1,781)	(1,602)	(953)	(1,210)	(1,356)	(1,352)	(761)	(961)	(1,080)	(1,226)	(648)	(818)	(922)
0 m	1481	746	993	1114	1055	534	692	778	802	413	528	595	641	334	424	478	569	304	385	434
(0' - 0")	(3,265)	(1,644)	(2,189)	(2,457)	(2,325)	(1,177)	(1,527)	(1,716)	(1,769)	(910)	(1,165)	(1,311)	(1,414)	(736)	(935)	(1,054)	(1,255)	(670)	(849)	(958)
-1 m	1185	755	1003	1124	889	536	695	780	668	415	530	596	--	--	--	--	567	379	483	543
-(3' - 3")	(2,613)	(1,664)	(2,212)	(2,479)	(1,959)	(1,182)	(1,532)	(1,721)	(1,474)	(914)	(1,169)	(1,315)	--	--	--	--	(1,249)	(836)	(1,064)	(1,197)
-2 m	--	--	--	--	--	--	--	--	--	--	--	--	--	--	--	--	--	--	--	--
-(6' - 7")	--	--	--	--	--	--	--	--	--	--	--	--	--	--	--	--	--	--	--	--
-3 m	--	--	--	--	--	--	--	--	--	--	--	--	--	--	--	--	--	--	--	--
-(9' - 10")	--	--	--	--	--	--	--	--	--	--	--	--	--	--	--	--	--	--	--	--

22 Steel track 300 mm/long dipper stick/ canopy

A / B	2 m (6' - 7")				2,5 m (8' - 2")				3 m (9' - 10")				3,5 m (11' - 6")				max			
	I	II	III	IV	I	II	III	IV	I	II	III	IV	I	II	III	IV	I	II	III	IV
3 m	--	--	--	--	--	--	--	--	477	474	477	477	--	--	--	--	513	394	494	513
(9' - 10")	--	--	--	--	--	--	--	--	(1,053)	(1,045)	(1,053)	(1,053)	--	--	--	--	(1,132)	(869)	(1,089)	(1,132)
2 m	--	--	--	--	--	--	--	--	525	462	525	525	504	360	452	504	504	299	376	423
(6' - 7")	--	--	--	--	--	--	--	--	(1,157)	(1,019)	(1,157)	(1,157)	(1,112)	(794)	(997)	(1,112)	(1,112)	(659)	(830)	(934)
1 m	--	--	--	--	876	565	726	812	686	432	549	615	584	343	434	488	514	270	342	386
(3' - 3")	--	--	--	--	(1,933)	(1,245)	(1,601)	(1,790)	(1,513)	(953)	(1,211)	(1,357)	(1,289)	(757)	(958)	(1,077)	(1,133)	(596)	(754)	(852)
0 m	1512	738	985	1106	1047	529	688	774	792	409	524	591	638	329	419	473	528	278	353	399
(0' - 0")	(3,334)	(1,627)	(2,172)	(2,440)	(2,308)	(1,168)	(1,518)	(1,706)	(1,747)	(901)	(1,156)	(1,302)	(1,406)	(725)	(924)	(1,043)	(1,165)	(612)	(778)	(880)
-1 m	1280	742	990	1111	940	526	685	771	716	406	521	587	--	--	--	--	535	336	428	483
-(3' - 3")	(2,823)	(1,636)	(2,182)	(2,449)	(2,073)	(1,161)	(1,510)	(1,699)	(1,579)	(894)	(1,149)	(1,295)	--	--	--	--	(1,180)	(741)	(944)	(1,065)
-2 m	556	556	556	556	--	--	--	--	--	--	--	--	--	--	--	--	427	427	427	427
-(6' - 7")	(1,226)	(1,226)	(1,226)	(1,226)	--	--	--	--	--	--	--	--	--	--	--	--	(942)	(942)	(942)	(942)
-3 m	--	--	--	--	--	--	--	--	--	--	--	--	--	--	--	--	--	--	--	--
-(9' - 10")	--	--	--	--	--	--	--	--	--	--	--	--	--	--	--	--	--	--	--	--

23 Steel track 300 mm/additional weight/short dipper stick/ canopy

A / B	2 m (6' - 7")				2,5 m (8' - 2")				3 m (9' - 10")				3,5 m (11' - 6")				max			
	I	II	III	IV	I	II	III	IV	I	II	III	IV	I	II	III	IV	I	II	III	IV
3 m	--	--	--	--	--	--	--	--	556	509	556	556	--	--	--	--	568	488	568	568
(9' - 10")	--	--	--	--	--	--	--	--	(1,227)	(1,123)	(1,227)	(1,227)	--	--	--	--	(1,251)	(1,076)	(1,251)	(1,251)
2 m	--	--	--	--	639	639	639	639	579	501	579	579	549	393	490	544	549	359	448	498
(6' - 7")	--	--	--	--	(1,409)	(1,409)	(1,409)	(1,409)	(1,276)	(1,105)	(1,276)	(1,276)	(1,211)	(867)	(1,080)	(1,199)	(1,211)	(792)	(987)	(1,098)
1 m	--	--	--	--	941	614	784	869	726	473	596	663	613	379	475	529	556	324	405	452
(3' - 3")	--	--	--	--	(2,074)	(1,353)	(1,728)	(1,917)	(1,602)	(1,044)	(1,315)	(1,461)	(1,352)	(835)	(1,047)	(1,166)	(1,226)	(713)	(893)	(996)
0 m	1481	817	1080	1201	1055	586	754	839	802	454	576	642	641	367	463	517	569	335	421	470
(0' - 0")	(3,265)	(1,802)	(2,380)	(2,648)	(2,325)	(1,292)	(1,662)	(1,851)	(1,769)	(1,001)	(1,270)	(1,416)	(1,414)	(810)	(1,020)	(1,139)	(1,255)	(738)	(927)	(1,036)
-1 m	1185	826	1090	1185	889	588	756	842	668	456	578	644	--	--	--	--	567	417	526	567
-(3' - 3")	(2,613)	(1,822)	(2,403)	(2,613)	(1,959)	(1,297)	(1,667)	(1,856)	(1,474)	(1,005)	(1,274)	(1,420)	--	--	--	--	(1,249)	(919)	(1,160)	(1,249)
-2 m	--	--	--	--	--	--	--	--	--	--	--	--	--	--	--	--	--	--	--	--
-(6' - 7")	--	--	--	--	--	--	--	--	--	--	--	--	--	--	--	--	--	--	--	--
-3 m	--	--	--	--	--	--	--	--	--	--	--	--	--	--	--	--	--	--	--	--
-(9' - 10")	--	--	--	--	--	--	--	--	--	--	--	--	--	--	--	--	--	--	--	--

24 Steel track 300 mm/additional weight/long dipper stick/ canopy

A / B	2 m (6' - 7")				2,5 m (8' - 2")				3 m (9' - 10")				3,5 m (11' - 6")				max			
	I	II	III	IV	I	II	III	IV	I	II	III	IV	I	II	III	IV	I	II	III	IV
3 m	--	--	--	--	--	--	--	--	477	477	477	477	--	--	--	--	513	430	513	513
(9' - 10")	--	--	--	--	--	--	--	--	(1,053)	(1,053)	(1,053)	(1,053)	--	--	--	--	(1,132)	(948)	(1,132)	(1,132)
2 m	--	--	--	--	--	--	--	--	525	503	525	525	504	394	491	504	504	329	410	457
(6' - 7")	--	--	--	--	--	--	--	--	(1,157)	(1,110)	(1,157)	(1,157)	(1,112)	(869)	(1,082)	(1,112)	(1,112)	(725)	(904)	(1,008)
1 m	--	--	--	--	876	617	788	873	686	473	597	663	584	377	473	527	514	298	374	418
(3' - 3")	--	--	--	--	(1,933)	(1,360)	(1,737)	(1,926)	(1,513)	(1,043)	(1,316)	(1,462)	(1,289)	(832)	(1,043)	(1,162)	(1,133)	(658)	(825)	(922)
0 m	1512	810	1072	1193	1047	582	750	835	792	450	572	638	638	363	458	512	528	307	386	432
(0' - 0")	(3,334)	(1,785)	(2,363)	(2,631)	(2,308)	(1,283)	(1,653)	(1,842)	(1,747)	(992)	(1,261)	(1,407)	(1,406)	(800)	(1,010)	(1,129)	(1,165)	(676)	(851)	(953)
-1 m	1280	814	1076	1198	940	579	746	832	716	447	568	635	--	--	--	--	535	370	468	522
-(3' - 3")	(2,823)	(1,794)	(2,373)	(2,641)	(2,073)	(1,276)	(1,646)	(1,835)	(1,579)	(985)	(1,253)	(1,399)	--	--	--	--	(1,180)	(817)	(1,031)	(1,152)
-2 m	556	556	556	556	--	--	--	--	--	--	--	--	--	--	--	--	427	427	427	427
-(6' - 7")	(1,226)	(1,226)	(1,226)	(1,226)	--	--	--	--	--	--	--	--	--	--	--	--	(942)	(942)	(942)	(942)
-3 m	--	--	--	--	--	--	--	--	--	--	--	--	--	--	--	--	--	--	--	--
-(9' - 10")	--	--	--	--	--	--	--	--	--	--	--	--	--	--	--	--	--	--	--	--

Index

Numerical

12 V plug receptacle 105, 106

A

Abbreviations 8
  Color code 8
Additional control circuits
  H1 127
  H2 132
  Hammer operation 130
  Hydraulic thumb 131
  Powertilt 132
Adjusting the seat 67
Air filter 192
Air intake 193
Alternator 90
Attachments 208
  Check lock 139, 150
  Discard 148
  Pick up 134
Auto stop 90
Automatic speed control 98

B

Basic functions joystick 110
Battery 191
Battery master switch 94
Bleeding fuel system 194
Brake
  Hydraulic brake 97
  Mechanical brake 97
Braking the upper carriage 112
Brief vehicle description 37
Bucket position when digging 120

C

Cab air filter 162
Charging indicator light 90
Clean the radiator 194, 195
Cleaning and care 188
Color code 8
Control elements at the operator station 40
Coolant 179
  Check the coolant level 180
  Mixing table 171
  Refill coolant 180
Correcting the tension of the track 197
Crane-lifting 155

D

Danger zone 13
  Lifting gear applications 14
Digging forces 214
Digging position 119
Digging trenches 120
Dimensions 206
Display 81, 198
  Error messages 83
  Indicator lights 83
  Status displays 83
Disposal 204
Door
  Locking 66
  Opening and closing 65
  Unlocking and locking 65
Dozer blade 113
Drive interlock 94
  EquipCare Dual ID 96
  Ignition lock immobilizer 94
Drive system 213
Driving downhill 101
Driving position 99
Driving speed 214
Driving uphill 101

E

Electrical components 210
Electrical connections
  Plug receptacle 212
  USB connection 213
Electrical system 191
Emergency exit 66
Emergency lowering 117
Engine hood 161
Engine start
  Starting aid 92
Entry and exit 64
EquipCare Dual ID 96
Error messages 198

F

Fire extinguisher 81
Fuel 174
Fuel filter 176
Functional check
  Joystick base 86
  Slewing gear brake 86
Fuse box 162
Fuses and relays 211

G

Glossary 9, 10

H

H1 127
H2 132
Hammer operation 130
Heating 109
High bucket operation 121
Horn 107
Hose breakage 113
Hydraulic brake 97
Hydraulic oil 172
  Checking hydraulic oil level 173
Hydraulic oil change interval for hammer operation 170
Hydraulic oil types 170
Hydraulic power coupler system 133
  Manual unlocking 141
Hydraulic system 191
  Damages 172
Hydraulic thumb 131

I

Information and regulations for use 13
Information before putting into operation 84
Information labels 52
Information on operation with organic hydraulic oil 170
Initial putting into operation and running-in time 88
Intended use 13
Interior light 107
ISO control 110
ISO/SAE control 111

J

Joystick base 86

K

Key to the symbols 7

L

Labels 43
Lamps 212
Lashing
  Requirements 157
Lashing points 157
Leveling 122
Levels 171
  Coolant 179
  Fuel 174
  Hydraulic oil 172
  Motor oil 177
  Washer system 181
Lifting capacity chart
  Lift capacity 229
Lifting capacity charts 229
Lifting eyes 154
Lifting gear applications 114
Lighting system
  Green rotating beacon 106
  Orange rotating beacon 105
  Work light 104
Load capacity chart 10, 215, 216
Load the vehicle 154
Loading 153
Loading transport vehicles 121
Loading weight 207
Locking and unlocking the door 66
Low-load operation 89, 90
Lubricate slewing ring bearing track 183
Lubricate the slewing ring teeth 184
Lubrication
  Boom system 182
  Mechanical quick hitch system 188
  Preparations 181
  Slewing ring bearing track 183
  Slewing ring gearing 184
Lubrication point 183

M

Maintenance
daily ... 164
Maintenance accesses ... 160
Coarse filter ... 162
Engine hood ... 161
Fine filter ... 162
Fuse box ... 162
Maintenance cover 2 ... 163
Maintenance cover 3 ... 163
Maintenance cover 2 ... 163
Maintenance cover 3 ... 163
Maintenance label ... 163
Malfunctions ... 199
Manual throttle ... 98
Manual unlocking ... 141
Mechanical power coupler ... 8, 147
Motor oil ... 177
Check the motor oil level ... 178
Motor oil types ... 171
Refill motor oil ... 178
Viscosity ... 171

N

Noise emissions ... 214, 215
Noise levels ... 215

O

Open/close engine hood ... 161
Opening/closing side windows ... 74
Opening/closing the front window ... 71
Operating in a salty environment ... 18
Operating personnel
Requirements ... 84
Operating temperature range ... 17
Operation in water ... 17
Outside rearview mirrors ... 76
Overload indicator ... 115
Overview
Controls vehicle with cabin ... 39
Overview control lights ... 82

P

Parking on slopes ... 104
Parking the vehicle ... 103
Permitted work ... 119
Powertilt ... 132
Preparation for maintenance ... 159
Prohibited works ... 122
Proportional control ... 147
Protective structures ... 37
Front Guard ... 78
Putting back into operation ... 204

R

Recovery ... 152, 153
Reducing pressure
Additional control circuits ... 127
Refuel ... 174, 176
Rotating beacon
Green rotating beacon ... 106
Orange rotating beacon ... 105

S

SAE control ... 110
Safe load indicator ... 115
Safety instructions
Symbols ... 19
Seat belt ... 70
Servicing the engine
Air filter ... 192
Air intake ... 193
Bleeding fuel system ... 194
Clean the radiator ... 194
V-belt ... 193
Shutdown
Permanent shutdown ... 204
Temporary shutdown ... 203
Stabilizer blade ... 113
Starter ... 89
Starting aid ... 92
Starting the engine ... 88
Starting to drive ... 101
Steering ... 97
Switch off the engine ... 91
Symbols
Display ... 81, 198
Safety instructions ... 19

T

Technical data
Digging forces ... 214
Dimensions ... 206
Electrical components ... 210
Engine data ... 210
Fuses and relays ... 211
Lamps ... 212
Weight of the vehicle ... 207
Temporary shutdown ... 203
Tilting the front window ... 74
Tracks ... 195, 213
Ground pressure ... 214
Transportation
Crane-lifting ... 155
Travel on slopes ... 101
Travel signal ... 107
Turning the upper carriage ... 87, 112
Type label cab ... 45

Type label Front Guard 45
Type plates 43
Types and trade names 37

U

Units of measurement 8
Upper carriage variants 38

V

V-belt 193
Vehicle
  Loading 153
  Recovery 152
Vehicle fluids 169
Vibrations 215
Viscosity
  Hydraulic oil types 170
  Motor oil 171
Visual aids 75

W

Warranty and liability 11
Washer system 181
Weight
  Attachments 209
  Loading weight 207
  Vehicle 207
Work light 104
Working hydraulics 191
Working on slopes 119
Working with a hydraulic hammer 128
Working with the bucket 119

COMPACT EXCAVATOR

www.aem.org

SAFETY MANUAL

FOR OPERATING AND MAINTENANCE PERSONNEL



Contents

Acknowledgment 2
Foreword 3
Safety Alerts 4
One-Call First 5
A Word To The User/Operator 6
Follow A Safety Program 7
Prepare For Safe Operation 13
Start Safely 22
Operate Safely 26
Shut Down Safely 39
Load And Unload The Machine Safely 40
Perform Maintenance Safely 41
Final Word To The User 51

Acknowledgment

We wish to acknowledge the contributions of the members of AEM's Compact Loader/Compact Excavator Council to the preparation of this Safety Manual.

NOTICE OF COPYRIGHT PROTECTION

Copyright, 2010, by the Association of Equipment Manufacturers. All rights reserved. This work may not be reproduced or disseminated in whole or in part by any means without the prior written permission of the Association of Equipment Manufacturers.

Copyright 2002-2010© AEM (Association of Equipment Manufacturers)
Revised 05/03, 09/10

Foreword

This safety manual is intended to point out some of the basic safety situations that may be encountered during the normal operation and maintenance of the machine and to suggest possible ways of dealing with these conditions. This manual is **NOT** a substitute for the compact excavator manufacturer's operator manual(s).

Additional precautions may be necessary, or some instructions may not apply, depending on equipment, attachments and conditions at the worksite or in the service area. The manufacturer has no direct control over equipment application, operation, inspection or maintenance. Therefore, it is **YOUR** responsibility to use safe work practices in these areas.

The information provided in this manual supplements the specific information about the machine that is contained in the manufacturer's manual(s). Other information that may affect the safe operation of the machine may be contained on safety signs or in insurance requirements, employer's safety and training programs, safety codes, local, state/provincial and federal laws, rules and regulations.





IMPORTANT! Before you operate the compact excavator, make sure you have the manufacturer's manual(s) for this machine and all attachments. If the manufacturer's manuals are missing, obtain replacement manuals from your employer, equipment dealer or directly from the manufacturer. Keep this safety manual and the manufacturer's manuals with the machine at all times. Read and understand all manuals.

Safety videos and other training resources are available from some manufacturers. Operators are encouraged to periodically review the safety video.

Safety Alerts

Symbol

This Safety Alert Symbol means: **"ATTENTION! STAY ALERT! YOUR SAFETY IS INVOLVED!"**



The Safety Alert Symbol identifies important safety messages on equipment, safety signs, in manuals or elsewhere. When you see this symbol, be alert to the possibility of death or personal injury. Carefully read the message that follows and inform other operators. Follow instructions in the safety message.

Signal Words

Signal words are distinctive words that will typically be found on safety signs on the compact excavator and other worksite equipment. These words may also be found in this manual and the manufacturer's manuals. These words are intended to alert the operator to a hazard and the degree of severity of the hazard.



DANGER indicates a hazardous situation which, if not avoided, will result in death or serious injury.



WARNING indicates a hazardous situation which, if not avoided, could result in death or serious injury.



CAUTION indicates a hazardous situation which, if not avoided, could result in minor or moderate injury.



NOTICE indicates a property damage message.

One-Call First



Call Before You Dig
Dial 811 (USA only)



888-258-0808
(USA and Canada)

Call

Before starting any digging project, contact the local One-Call service by dialing 811 (USA only) to have underground utilities located. A One-Call referral number, **1-888-258-0808**, is also available for both USA and Canada.

One-Call will notify participating utility companies that you intend to dig. You must also call utility companies that do not participate in the One-Call service.

Always inspect the jobsite for evidence of unmarked utilities and contact others if necessary.

Plan The Work

Be aware of the lead time for marking the work area. This time may vary from state to state and county to county. If you do not locate utilities, you may have an accident or suffer injuries, cause service interruptions, damage the environment or experience job delays.

Dig

Most utilities mark their underground facilities using American Public Works Association (APWA) underground color codes. Verify marks before digging.

In the United States, OSHA Standard 29 CFR 1926.651 requires that the estimated location of underground utilities be determined before beginning an excavation. When actual excavation approaches an estimated utility location, the exact location of the underground installation must be determined by a safe, acceptable and dependable method. Other OSHA regulations may also apply to the jobsite.

A Word To The User/Operator

It is **YOUR** responsibility to read and understand the safety manual and the manufacturer's manuals before operating this machine. This safety manual takes you step by step through the working day.

Graphics have been provided to help you understand the text.

IMPORTANT: This manual covers safe practices for Compact Excavators. If the machine is equipped with special attachments, read the manufacturer's operator and safety manuals pertaining to those attachments before using them.



Read And Understand All Safety Signs

Remember that **YOU** are the key to safety. Good safety practices not only protect you but also protect the people around you. Study this manual and the manufacturer's manuals for the specific machine. Make them a working part of your safety program. Keep in mind that this safety manual is written only for compact excavators.

Contact the manufacturer of the equipment to answer any questions about safe operation that remain after studying the manufacturer's manual(s) and this safety manual.

Practice all other usual and customary safe working precautions and remember:

SAFE OPERATION IS UP TO YOU!

YOU CAN PREVENT DEATH OR SERIOUS INJURY CAUSED BY UNSAFE WORK PRACTICES!

Follow A Safety Program

Be Alert!

Know where to get assistance. Know where to find and how to use a first aid kit and fire extinguisher/fire suppression system.

Be Aware!

Take advantage of training programs offered.

Be Careful!

Human error is caused by many factors: carelessness, fatigue, overload, preoccupation, unfamiliarity of the operator with the machine or attachment, drugs, and alcohol to name a few. You can prevent death or serious injury caused by unsafe work practices.

For your safety and the safety of others, encourage fellow workers to act safely.



For Safe Operation

You must be a qualified and authorized operator for safe operation of this machine. You must clearly understand the written instructions supplied by the manufacturer, be trained—including actual operation of the compact excavator—and know the safety rules and regulations for the worksite. It is a good safety practice to point out and explain safety signs and practices and ensure others understand the importance of following these instructions.

WARNING! Drugs and alcohol affect an operator's alertness and coordination and the operator's ability to safely operate the equipment. **Never operate the compact excavator while impaired by use of alcohol or drugs. Never knowingly allow the operation of this machine when operator alertness or coordination is impaired.** An operator taking prescription or over-the-counter medication must consult a medical professional regarding any side effects of the medication that would hinder the ability to safely operate this equipment.

Follow A Safety Program

Protect Yourself

Wear personal protective clothing and Personal Protective Equipment (PPE) issued to you or called for by job conditions.

You may need:
— Hard hat
— Safety boots with non-slip soles
— Safety glasses, goggles or face shield
— Heavy-duty gloves
— Hearing protection
— Reflective or high-visibility clothing
— Wet weather gear
— Respirator or filter mask

Wear whatever is needed to protect yourself—do not take chances.



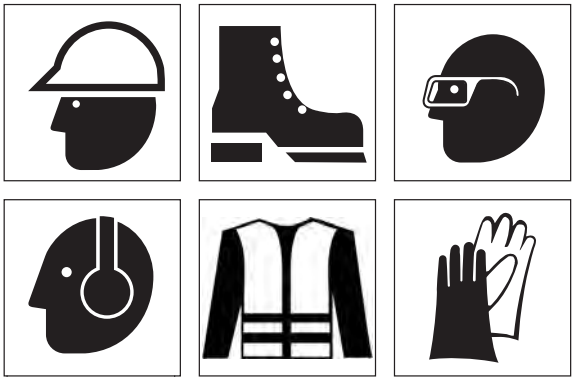

WARNING! Prevent death or serious injury from entanglement. **Do not wear loose clothing or accessories. Restrain long hair. Stay away from all rotating components when the engine is running.** Contact, wrapping or entanglement with rotating or moving parts could result in death or serious injury.

Follow A Safety Program

Know The Rules

Most employers have rules governing operation and maintenance of equipment. Before you start work at a new location, check with your supervisor or the safety coordinator. Ask about the rules you will be expected to obey.

The Occupational Safety and Health Administration (OSHA) enforces federal laws within the United States that apply to the safe operation, application and maintenance of equipment on a worksite. It is the employer's responsibility to comply with these laws. A federal representative may periodically inspect a worksite to see that these laws are being followed.

There may also be local, state/provincial, federal laws or international regulations that apply to this equipment and its use, along with specific worksite or employer rules. It is important that you know and comply with all applicable laws and rules, including those requiring operator training and certification.



Know And Understand Rules Of Operation

Follow A Safety Program

Some Rules You Must Work By

— Know the limitations and operating characteristics of the compact excavator. Do not overload it.
— Always wear the seat belt, if equipped. If the compact excavator is equipped with a foldable TOPS/ROPS, do not fasten the seat belt when the TOPS/ROPS is in the down position.
— Always have all shields and guards properly installed before operating the machine.
— Inspect the machine and all attachments before each use as specified by the manufacturer and your employer. Ensure the attachment is properly installed. (See page 17, **Quick-coupling Device Safety**.)
— Only use parts and attachments that are approved by the original equipment manufacturer.
— Never modify or remove any part of the equipment (except for service—then make sure it is replaced).
— Read and understand all safety signs installed on the machine.
— Know the location of other personnel and machines and make sure they are a safe distance from the machine.
— Know the worksite. Be aware of possible hazards that you may encounter.

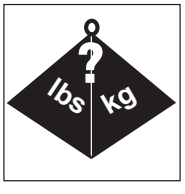

Know Machine Limitations And Operating Characteristics



Inspect The Machine Before Each Workday

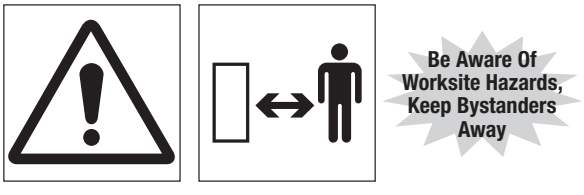

Be Aware Of Worksite Hazards, Keep Bystanders Away

Follow A Safety Program

— Always look in the direction of machine or boom movement. Drive facing the travel direction whenever possible.
— Make sure you understand the rules covering traffic at the worksite. Know what all signs, flags and markings mean.
— Understand hand, flag, horn, whistle, siren and bell signals, if used at the worksite.
— Know when to use lights, turn signals, flashers and horns, if equipped.
— Do not allow riders.
— Keep hands and feet on controls when operating.
— Never lift or swing a load or attachment over anyone.
— Whenever you leave the machine, lower the excavator blade, bucket or other attachments to the ground. Stop the engine. Cycle the hydraulic controls, including auxiliary hydraulic control, to relieve trapped pressure. Engage control lock if equipped, and remove the ignition key. (See page 39, **Machine Shutdown**.)
— When transporting the compact excavator on a trailer, follow the manufacturer's instructions for loading, tying down and unloading the compact excavator.



Understand Worksite Signals



No Riders



Never Lift Or Swing A Load Or Attachment Over Anyone

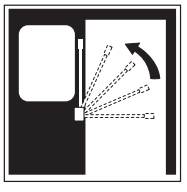

Engage Control Lock

Follow A Safety Program

Know The Equipment

Read and understand the DANGER, WARNING, CAUTION and NOTICE safety signs and other informational signs found on the compact excavator and in the manufacturer's operator manual. Ask your supervisor to explain any information you do not understand. Failure to obey safety instructions could result in death or serious injury.

Make sure all the manufacturer's protective structures, guards, shields, screens and panels are in good repair, in place and securely fastened. Damaged, missing or weakened safety components can create a hazardous situation for you as the operator. **Never** remove or modify any safety components on the compact excavator. The excavator can be operated temporarily with a foldable TOPS/ROPS lowered for access through height-restricted openings. Do not fasten the seat belt when the TOPS/ROPS is in the down position.

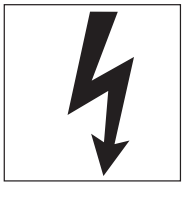





Read And Understand All Safety Signs

Know the following about this compact excavator and all attachments.

— Function, purpose and use of controls
— The functions of all gauges, lights, dials, switches
— Slope and uneven terrain capabilities and proper operation – never operate on a slope with a foldable TOPS/ROPS in the down position.
— Braking and steering characteristics
— Turning radius and clearances
— How to quickly stop equipment in an emergency



Read And Understand Manuals Before Operating

Prepare For Safe Operation

Check And Use All Available Protective And Safety Devices

Keep all protective devices in place and tightly fastened. Make certain all guards, screens and panels, manufacturer's operator manuals, and safety signs are installed on the machine and legible as supplied by the manufacturer. See that each item is securely in place and in operating condition.

The machine may be equipped with:

— A seat belt or other type of restraint
— Control locking device
— Safety signs
— Access and egress system (i.e., grab handles, handrails) and protective covers
— Travel alarm and back-up alarm
— Falling object guard structure (FOGS), falling object protective structure (FOPS), roll-over protective structure (ROPS)/tip-over protective structure (TOPS)
— Guards
— Special enclosures or accessories required for task or worksite conditions
— Operator protective structure (OPS) – side, front and rear shields, screens and doors
— Warning lights and devices
— Alternate exits
— Mirrors
— Fire extinguisher
— First aid kit
— Windshield wipers and washers
— Window defroster
— Operating lights
— Horn

Know which devices are required for protection during your specific operation and use them. The excavator can be operated temporarily with the TOPS/ROPS lowered for access through height restricted openings. Do not fasten the seat belt when the TOPS/ROPS is in the down position.

WARNING! NEVER remove or modify safety equipment. Operating a machine without a protective structure (TOPS/ROPS, FOGS/FOPS or OPS) could result in death or serious injury. (See page 44, **Protective Structure Safety**.)



Prepare For Safe Operation

Check The Machine

Before you begin the workday, inspect the machine and have all systems in good operational condition. Do not operate the machine until all problems are corrected.

— Perform daily and periodic service procedures as instructed by the equipment manufacturer.
— Check that no safety switches or interlocks have been bypassed and that no warning tags have been placed on the machine.
— Check that safety signs, special instructions, lift capacity charts and operator manuals are legible and in the proper location.
— Check condition and operation of the seat belt and its mounts, if equipped.
— Make sure that the foldable TOPS/ROPS, if equipped, is properly secured in the raised position.
— Check condition and operation of the attachment quick-coupling device, if equipped. Perform daily cleaning and maintenance following the manufacturer's instructions. (See page 17, **Quick-coupling Device Safety**.)
— Inspect steps, guardrails, platforms and handholds for damage or loose parts.



Prepare For Safe Operation

— Check the fuel and hydraulic systems. Have leaks repaired and fill to proper level.
— Check all exposed hydraulic components for leaks, routing problems or damage. Report worn or damaged components.

WARNING! Diesel fuel and hydraulic fluid under pressure can penetrate the skin or eyes and cause serious injury, blindness or death. Fluid leaks under pressure may not be visible. **Use a piece of cardboard or wood to find leaks, not your hand. Wear a face shield or safety goggles for eye protection.** If fluid is injected into the skin, it must be removed within a few hours by medical personnel familiar with this type of injury. (See page 46, **Hydraulic System Hazards**.)

— Check the cooling system.

WARNING! Prevent possible injury from explosive release of hot fluids. **Allow the radiator to cool before checking the fluid level**. (See page 45, **Cooling System Hazards.**)

— Keep radiators and coolers clean and free of oil, grease, dirt, debris and moisture.
— Make sure all doors, guards and covers are in place and secured properly.



Prepare For Safe Operation

Check The Machine (continued)

— Check the tracks for broken or damaged pins, bushings, and other parts.
— Check the tracks for proper tension adjustment according to manufacturer's instructions.
— Check the tracks for damage or wear. Replace badly worn or damaged tracks.
— Check the slew/swing brake for proper operation.
— Inspect working and other lights for proper operation.
— Inspect boom, arm and attachment for wear and damage.
— Make sure fire extinguishers are fully charged and in good working order.

Check Attachment And Coupler Installation

When changing buckets or installing attachments, follow the manufacturer's instructions for proper maintenance and coupling. Make sure all connectors are securely fastened. Tighten all bolts, nuts and screws to torques recommended.

Check the attachment coupler and the attachment for wear and hydraulic leaks before coupling the attachment.

Before operating, ensure that quick-coupler pins or wedges are fully engaged and visibly locked to the attachment.

WARNING! Avoid possible crushing injury. **Failure to properly secure the attachment to the machine coupler can allow the attachment to come off and could result in death or serious injury.** (See page 17, **Quick-coupling Device Safety**.)

Prepare For Safe Operation

Quick-coupling Device Safety

Before using a quick-coupling device you must know and understand proper installation, maintenance and operation.

WARNING! Failure to read and follow manufacturer's instructions for the correct operation and maintenance of the quick-coupler can allow the attachment to come off and cause death or serious injury.

Protect yourself from injury:
- — Install and maintain equipment, attachments and their operating systems according to manufacturers' instructions.
- — Securely latch attachments before work begins.
- — Follow the manufacturer's instructions for using positive locks on quick-coupling equipment.
- — Make frequent visual inspections of quick-coupling systems—especially after changing attachments.
- — Always check for interference limits of the coupler or tool with the carrier before operating.

Do not operate the machine if:
- — there exists an incompatibility among components.
- — there are broken, damaged or badly worn components.
- — the lock/secure feature of the quick-coupler is impaired.
- — the engaging lever or device is not fully engaged in a lock/secure condition.



Read And Understand Manuals Before Operating

WARNING! A quick-coupler that is not properly locked/secured could result in death or serious injury. **Perform all steps to lock/secure the device.** The steps to confirm that the device is properly locked/secured may include any or all of the following:
- — Manually installing a locking pin, actuating a lever or other device.
- — Movement of the attached work tool to confirm its engaged lock/secure condition.
- — A visual check of the components as instructed by the quick-coupler manufacturer.

WARNING! A quick-coupler that is disengaged when the attachment is in an unstable position could result in death or serious injury. **Place the attachment in a stable position, as instructed by the manufacturer, whenever coupling or uncoupling the attachment.**

Prepare For Safe Operation

Clean Up

Clean windshields, mirrors and all lights. Use water and a clean cloth. Know and follow the manufacturer's recommendations for using cleaning agents other than clean water on polycarbonate glazing.

Clean out the operator's area. Steps and handholds must be clean and functional. Oil, grass, leaves, needles, snow, ice or mud in these areas can cause you to slip and fall.

Clean your boots before getting on the machine.

Clean out trash and debris buildup promptly, especially in the engine compartment, the battery box, around exhaust components, under the machine and around rotating components.

Remove all loose personal items or other objects from the operator's compartment. Secure these items in a fixed tool box or remove them from the machine. Do not store any flammable material such as ether/cold-start fluid or oily rags in the operator's compartment.

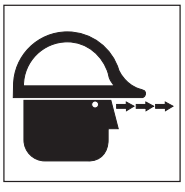

Maintain Vision – Clean Up



Avoid Falls – Clean Slippery Surfaces



Avoid Fire – Clean Out Debris



Put Away Tools And Loose Items

Prepare For Safe Operation

Check The Work Area

Know—beforehand—as much about the worksite as possible. Locate all ground workers near the worksite and make sure clothing worn is easily seen. Be aware of weather conditions that can affect visibility, ground stability and traction.

Check for:
- Location of steep slopes, slide areas, drop-offs and overhangs
- Adequate traction on slopes
- Traffic locations and movement
- Thick dust, smoke and fog
- Soil conditions—look for signs of instability such as cracks or settlement
- Standing water and marshy areas
- Rocks and stumps
- Holes, obstructions, mud or ice
- Location of open trenches
- Exact location of any buried and/or overhead electrical, gas, telephone, water, sewer or other utility lines

Have the utility company mark, shut off or relocate the utility before you begin working.

Know the location and work plan for other machines on the worksite.

Correct unsafe conditions. Avoid operating in problem areas that cannot be corrected.

When operating the machine inside a building, know what clearances you will encounter—overhead, doorway, aisles, etc. Also, know the weight limitations of floors and ramps. Make sure there is sufficient ventilation for inside operation.



Walk Around The Worksite



Be Seen – Wear Visible Clothing

Prepare For Safe Operation

Check The Work Area (continued)

Know the exact location of electrical, telephone, gas or other utility lines. (See page 5, **One-Call First**.)

DANGER! Death or serious injury will result from touching or being near a machine that is in contact with or near an energized electrical source. **Never approach power lines with any part of the machine or load unless all local, state/provincial and federal (OSHA) required safety precautions have been taken.** Use extreme caution because high voltage sources can arc without contact.

When working near power lines, you must assume all lines are energized.

Maintain a safe distance from all utilities.
(See page 31, **Utilities—Overhead And Underground**.)

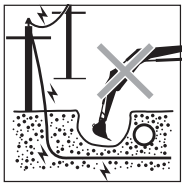

Locate All Utilities, Maintain A Safe Distance

Use Caution When Fueling

IMPORTANT! Always use approved fuel containers and dispensing equipment.

Fuels are flammable, so observe these practices to reduce the possibility of a serious accident.
- Shut off engine and ignition during refueling.
- Always ground the fuel nozzle against the filler neck to avoid sparks.
- Keep sparks and open flames away from fuel.
- Do not use a cell phone or two-way radio while fueling or handling fuel—they could cause sparks.
- Do not smoke while refueling or when handling fuel containers.
- Do not overfill the tank or spill fuel. Clean up spilled fuel immediately.

Prepare For Safe Operation

Mount And Dismount Properly

When you enter or leave the machine:

— Maintain a three-point contact with the machine. Three-point contact is defined as maintaining contact with at least one hand and two feet, or two hands and one foot, at all times.
— Face the machine when either mounting or dismounting.
— Use handholds, handrails, ladders or steps (as provided).
— The upperstructure and undercarriage must be oriented to align the access system.
— Never use control levers as handholds.
— Never step on foot controls when entering or leaving.
— Clean your boots and wipe your hands before mounting or dismounting.
— Never jump on or off the machine.
— Never attempt to mount or dismount a moving machine.
— Never mount or dismount while carrying tools or objects that prevent three-point contact.



Maintain Three-Point Contact – Face Machine



Do Not Jump Off Machine



Do Not Use Controls As Handholds

Start Safely

Look Out For Others

Before starting, walk completely around the machine operating area. Make sure no one is under it, on it or close to it. Do not start the engine until everyone is clear of the operating area.

Starting The Engine

Do not start the engine or move any of the controls if there is a “DO NOT OPERATE” or similar warning tag attached to the start switch or controls. Check with your supervisor.

WARNING! Start the engine only from the operator’s seat. Never attempt to start the engine by shorting across starter terminals or reaching for the key from outside the cab. This could result in the machine moving suddenly and unexpectedly and cause death or serious injury.

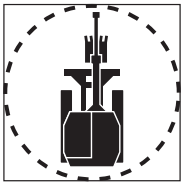

Walk-Around Inspection

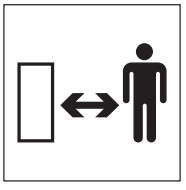

Keep Bystanders Away

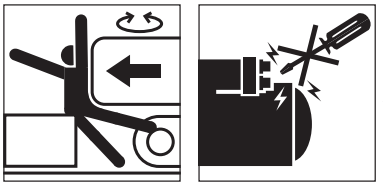

Start Only From Operator’s Position

Start Safely

Know the exact starting procedures for this machine. See the manufacturer's manual(s) for starting procedures.

— Clear the area of all persons.
— Sit in the operator's seat and adjust the seat so you can operate all the controls properly.
— Familiarize yourself with warning devices, gauges and operating controls.
— Close or secure the cab door, if equipped.
— Fasten the seat belt, if equipped. If the compact excavator is equipped with a foldable TOPS/ROPS, do not fasten the seat belt when the TOPS/ROPS is in the down position.
— Put all controls, including those for auxiliary equipment, in the neutral/park position.
— Activate controls by releasing the control lock, if equipped.
— Start the engine following the instructions in the manufacturer's manual(s).

If it is necessary to run the engine or operate the machine within an enclosed area, be sure there is adequate ventilation.

WARNING! Never operate any type of engine without proper ventilation—exhaust fumes can kill.

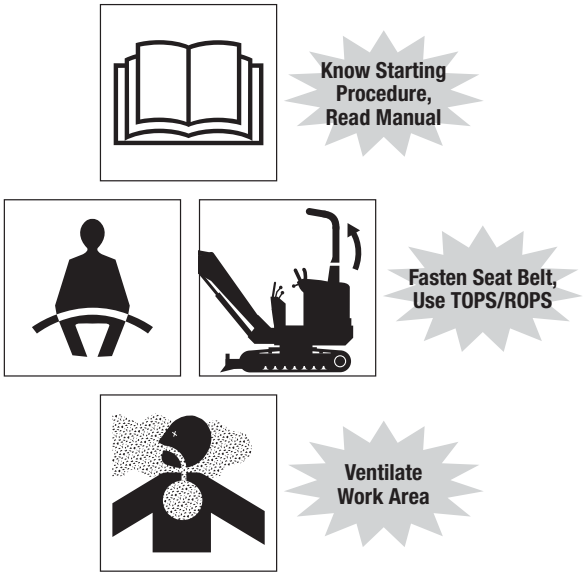

Start Safely

Starting Aids

Do not use ether/cold-start fluid if the engine is equipped with glow plugs or intake manifold preheater.

Ether/cold-start fluid is HIGHLY FLAMMABLE. Before using it, always read the instructions on the ether/cold-start fluid container and the instructions in the manufacturer's manual(s). **Do not** carry loose cans of starting fluid on the machine while operating.

If booster cables are used, follow the instructions in the manufacturer's manual(s). The operator must be in the operator's seat when boost-starting the engine so that the machine will be under control when the engine starts. Boost-starting is a two-person operation. A battery explosion or a run-away machine could result from improper starting procedures.

Never boost-start a frozen battery. (See page 48, **Avoid Battery Explosion**.)

After Starting The Engine

Observe gauges, instruments, and warning lights to ensure that they are functioning and their readings are within the operating range.

With the control levers or joysticks in neutral, test engine speed control.

Run An Operating Check

Do not use a machine that is not in proper operating condition. It is the **operator's responsibility** to check the condition of all systems, and to run the check in a safe area.

WARNING! Do not allow anyone to stand within the operating work radius of the machine and load. Contact with moving parts of the compact excavator or load can cause death or serious injury.



Start Safely

Test All Controls

Follow the manufacturer's recommended warm-up procedures and bring all machine systems to operating temperature.

Machines come equipped with various control configurations, patterns and operating modes. Some have selectable or configurable controls that allow operation to suit personal preferences or specific applications. Make sure that you know which control pattern has been selected and understand how the machine will operate.

Make sure the engine is operating correctly. Operate each machine control to check all functions.

Check for possible interference between the attachment and the cab and operate appropriately.

Make sure the attachment quick-coupling device (if equipped) is operating properly, fully engaged and visibly locked. (See page 17, **Quick-coupling Device Safety**.)

Check the blade location before traveling. When the blade is in the rear, operate the steering levers in the opposite direction as when the blade is in the front. See the machine manufacturer's manual.

Operate the control(s) to ensure correct operation in forward, neutral and reverse.

Test steering—right and left—while moving slowly.

WARNING! Prevent possible injury from loss of control. **Know and understand the selected control pattern and operating mode before operating. Be certain you can control speed, direction, braking and boom motion before operating the machine.**

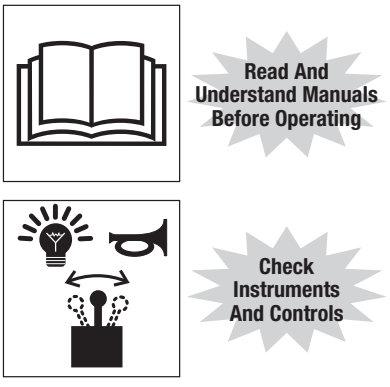

Operate Safely

Remember

— Stay in the operator's seat, with the seat belt fastened, if equipped. If the compact excavator is equipped with a foldable TOPS/ROPS, do not fasten the seat belt when the TOPS/ROPS is in the down position.
— Understand the machine's limitations. Be in control of the machine at all times.
— Assure yourself that the work area is clear of all bystanders and other machines. Stop the machine immediately if anyone approaches.
— If a failure that causes loss of control occurs, stop all machine motion as quickly as possible. Shut the machine down and remove the key. Correct or report the problem immediately.

Remember The Other Person

WARNING! Never allow an untrained or unqualified person to operate this machine. Handled improperly, this machine could cause death or serious injury.

Do not allow anyone within the operating work radius of the compact excavator.

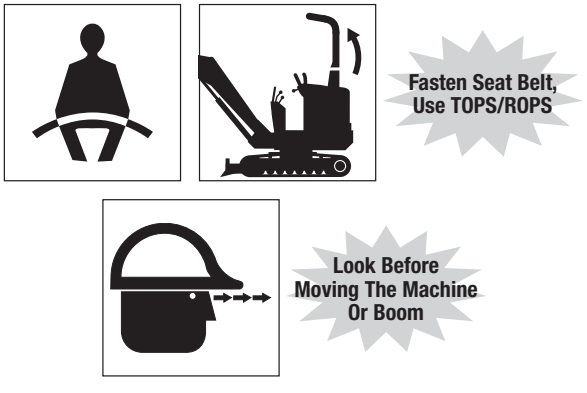

Never use a bucket or other attachment as a work platform or personnel carrier.

WARNING! Prevent possible injury from fall or runover. The compact excavator is a one-person machine. **NEVER PERMIT RIDERS.**

Always look around before you travel or move the boom. Look in the direction of machine movement.

Awareness on your part can prevent accidents.

Operate Safely

Traveling On The Worksite

Know and understand the worksite traffic flow patterns and obey signalmen, road signs and flagmen.

Check blade location before traveling. When blade is positioned to the rear, operate the steering levers in the opposite direction as when the blade is in the front.

The retractable track frame, if equipped, should be extended for traveling on the worksite. The track frame can be retracted to access narrow areas. Read and know manufacturer's instructions before operation.

Know the maximum height and width of the machine. Do not obstruct your vision when traveling. Always look in the direction of travel. Drive facing the travel direction when possible.

Operate the controls smoothly and slowly. Rapid and jerky movement of the controls can cause loss of both machine stability and control of the load.

When moving the machine, watch that enough clearance is available on both sides and above the boom and cab. Be especially careful to allow extra clearance on uneven ground.

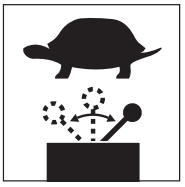

Operate Controls Smoothly And Slowly



Know Weight Limits

Check for hazards or obstructions before entering an underpass or other area with restricted clearance. Check height and side clearances.

WARNING! Avoid possible injury. The weight of the machine may cause the ground, dock, ramp or floor to give way, causing loss of control, fall or tipover. **Know weight limits and stay clear of the edges of excavations and drop-offs.** Failure to know and observe weight limits and use caution could result in death or serious injury.

Operate Safely

Traveling On The Worksite (continued)

Make sure all surfaces will support the weight of the machine.

Do not cross ditches, creeks or wet draws without an adequate fill or bridge crossing.

Match travel speed to the traffic, weather and ground conditions. Take it slow and easy when traveling. Travel cautiously over rough or slippery ground and on slopes. Reduce speed when travelling over a rise.

Always give the right of way to loaded machines. Maintain a safe distance from other machines.

If you encounter a blind corner, stop and then proceed with caution.

Avoid traveling over obstacles (logs, tree stumps, rough terrain, ditches, curbs, railroad tracks) whenever possible. If you must cross an obstacle, do so slowly and with caution.

Avoid steep slopes or unstable surfaces. If it is necessary to travel on a slope, follow manufacturer's specific instructions. When on a slope, keep the boom centered and attachment as low and as close to the machine as possible. Proceed with extreme caution. Do not drive **ACROSS** a steep slope under any circumstances. Drive straight up and down a slope.

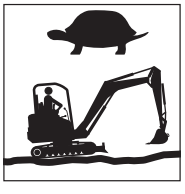

Travel Slowly Over Rough, Hazardous Terrain

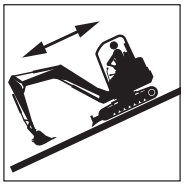

Drive Straight Up And Down – NOT ACROSS – Steep Slopes

Avoid turning on a slope. If it is necessary, use extreme caution and make the turn **WIDE and SLOW** with the boom centered and attachment as low and as close to the machine as possible.

Avoid sudden movement of the travel controls.

Operate Safely

Safety Precautions

Never reach into the compact excavator and attempt to operate the controls from outside the cab.

Before starting to excavate, set up safety barriers to the sides and rear area of the swing pattern to prevent anyone from walking into the working area.

Read and know manufacturer's instructions before operation.

Make sure you are aware of personnel or machines that may be hidden in blind spots on the worksite, such as piles or stacks of material.

Make sure the machine has sufficient clearance from other machines or material on the worksite to prevent contact during machine or attachment movement.

WARNING! Prevent death or serious injury. **Never lift, move or swing a load over any person or any machine cab.**

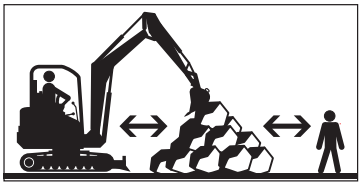

Check Clearance, Look Out For Others



Do Not Lift Or Swing A Load Or Attachment Over Anyone

Know and use the hand signals required for particular jobs. Know who has the responsibility for signaling. Take signals from one person only.

Do not operate during storms with high winds or lightning strikes. Do not mount or dismount during a period of lightning strikes. If you are on the machine, stay on it. Warn others to stay clear of the machine in case of a lightning strike.

Operate Safely

Load Lifting

Consult the rated lift capacity chart. Do not overload this machine. Know the exact lifting capacity of the machine as equipped. Make sure you have and know how to use a current lift capacity chart for the machine. Changing conditions such as slopes, wind, ice, mud, soft ground, type of load or the weight of attachments will affect the capacity and operating characteristics of the machine.

Consult your lift chart. Lifting and handling loads over the end of the machine, rather than over either side, will improve the lifting performance of the machine.

The retractable track frame, if equipped, should be fully extended for increased lifting performance.

Attach loads only to the manufacturer's designated lifting points, if equipped.

If equipped, keep blade lowered for increased lifting performance. If ground is soft, place pads or timbers under the blade.

Operate the controls smoothly and slowly. Rapid and jerky movement of the controls can cause loss of both machine stability and control of the load.

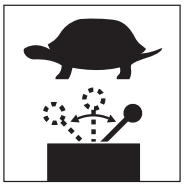

Operate Controls Smoothly And Slowly

When lifting, be sure the load is properly balanced. Move slowly so the load does not sway or swing around. Use a tag line for control.

If tracks or blade leave the ground, slowly lower the load to return the machine to the ground. Do not drop the load suddenly, because this can lead to loss of control.

Do not exceed rated lift capacity. Excessive load can cause tipping or loss of control.

Carry the load/attachment low and as close to the machine as possible. You must allow for movement in all directions. Be careful to maintain clearance of the attachment and load from the cab.

Keep all guards in place and windows closed or locked open. Keep cab doors closed or otherwise secured, if equipped.

Never leave the operator's seat with a load suspended. (See page 39, **Machine Shutdown.**)

Operate Safely

Utilities – Overhead And Underground

DANGER! Electrocution or serious injury will result from CONTACTING or APPROACHING power lines or apparatus. Maintain Minimum Approach Distance. (See chart.)

DANGER! Death or serious injury will result from touching or being near a machine that is in contact with or near an energized electrical source. **Never approach power lines with any part of the machine or load unless all local, state/provincial and federal (OSHA) required safety precautions have been taken.** Use extreme caution because high voltage sources can arc without contact.

REQUIRED CLEARANCE FOR OPERATION NEAR HIGH VOLTAGE POWER LINES		
Normal Voltage, kV (Phase to Phase)	Minimum Approach Distance [Note (1)] ft	(m)
to 50	10	(3.0)
Over 50 to 200	15	(4.6)
Over 200 to 350	20	(6.1)
Over 350 to 500	25	(7.6)
Over 500 to 750	35	(10.7)
Over 750 to 1,000	45	(13.7)
NOTE: (1) Environmental conditions such as fog, smoke or precipitation may require increased clearances.		

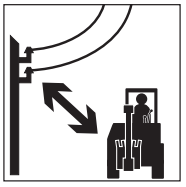

Maintain Minimum Approach Distance



Stay Clear Of Energized Equipment

Check overhead clearances. If possible, have power to the lines de-energized and visibly grounded. If not possible, request a signal person for guidance to maintain at least the Minimum Approach Distance. (See chart.)

If the machine or load contacts an energized line, stay in the machine and attempt to break contact. Warn others to stay away from the machine. If machine catches fire and you are forced to leave, jump clear of the machine with both feet together and hop or shuffle away. **DO NOT** touch machine and ground at the same time.

Operate Safely

Locate All Underground Utilities

Confirm that One-Call has been contacted. Confirm that any utilities not subscribing to One-Call have been contacted. Confirm that the site has been marked or cleared. (See page 5, **One-Call First**.)

Obtain all information pertaining to the locate request, including the One-Call confirmation code or ticket number. If the facility owner has provided a locate sketch, obtain a copy. Review any engineering drawings provided by utilities. This information should be retained.

Personally verify One-Call utility marks. There are variations from state to state.

Take a copy of the locate sketch to the job site. Confirm all of the locates. Review the site for signs of unmarked utilities. These signs may include pedestals, pole risers, meters, trench lines, manhole covers, sewer drain outlets, etc. Review not only the immediate area, but also the perimeter of the area for utility markers.

Additionally, the area should be swept by an experienced operator using a device to locate utilities and large metal objects.

Any inconsistencies with line locations or any inaccurate locates must be resolved.

When excavating near underground services, expose the service by hand-digging or by using soft excavation, such as vacuum excavation, if permitted by local utilities.

When gas lines are present on the site, do not smoke or do anything to cause a spark in the vicinity of a gas line.

Make plans to restrict working area access—with cones and tape, barriers, warning signs, fences, etc.—until the job is complete.

Make certain that you are in compliance with all local, state/provincial, national and other requirements and regulations, including those regarding open excavations, or “potholes.”

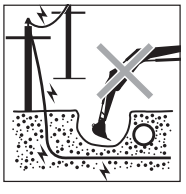

Locate All Utilities, Maintain A Safe Distance

Operate Safely

Trenching Safety Precautions

Follow the worksite plan for proper construction of the trench. Check with your supervisor if you are unsure of correct trench construction or if operating conditions change.

Stay alert to changes in soil conditions. Trench collapse is hazardous to all workers in the area and could cause the machine to slide into the trench.

Keep heavy loads and equipment as far from the trench as possible.

Keep spoil and stored materials such as pipe at least two feet from the edge of the trench.

Keep personnel away from the equipment and attachments.

Never swing a load or attachment over anyone.

Do not undercut the machine.

WARNING! Do not dig under the machine or blade. A resulting cave-in could cause death or serious injury.

WARNING! Avoid possible death or serious injury from trench wall collapse. **Before backfilling, see the manufacturer's manual for any specific instructions. Do not get too close to the edge of the cut.** The weight of the machine plus the fill could cause the trench wall to collapse.



Keep Personnel Away From Equipment And Attachments

Operate Safely

Slope And Uneven Terrain Operation

Compact excavator stability and load capacity are greatly reduced on slopes. Ensure the operation can be done safely. Prevent overturns and maintain stability control:

— Use machines equipped with TOPS/ROPS and a seat belt. Make sure folding TOPS/ROPS is raised and locked in place—always use the seat belt.
— The retractable track frame, if equipped, should be extended for operating on slopes or uneven terrain. Read and know manufacturer's instructions before operation.
— Review the manufacturer's manual for specific instructions and limitations, including those for proper operation of alternate/emergency exits.
— Avoid extremely steep slope operation.
— Keep machine movements slow and smooth.
— Level the working area and machine as much as possible.
— Avoid working with the tracks across a slope. This will reduce stability and increase the tendency of the machine to slide. Position the machine with the tracks running up and down the slope—blade downhill and lowered.
— Avoid slippery ground conditions.

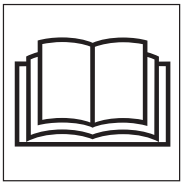

Always Check Manuals For Specific Instructions



Fasten Seat Belt, Use TOPS/ROPS

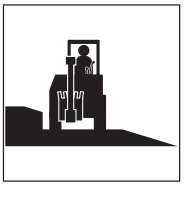

Level The Work Area If Possible

Operate Safely

— Travel straight up and down the slope with the attachment low and close to the machine. Do not move the boom while travelling.
— Avoid swinging to the downhill side of a slope. Always keep the boom and attachment as low and close to the machine as possible.

If the machine begins to tip, roll or slide, stay in the machine with the seat belt securely fastened. Lower the attachment immediately. Hold on firmly and brace your feet on the floor. Lean away from the point of impact.

When operating the compact excavator on a slope, swing to the uphill side to dump load, if possible. If downhill dumping is necessary, swing only as far as required to dump the bucket. Use extreme caution. Always drop spoil a sufficient distance from a trench to prevent cave-ins.

If possible, avoid working with the tracks across a slope.

Before moving the machine, raise the blade sufficiently to clear the ground, and then drive the machine forward or backward as required. Lower the blade to level the machine.

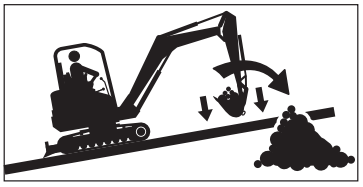

Swing Load Uphill When On A Slope

Operate Safely

Hazardous Conditions

When working in hazardous areas, be extremely alert.

Always consult the manufacturer's operator manual for specific instructions.

Extreme caution is required when working near the edge of an excavation. Keep the machine a safe distance away from the edge. Avoid undercutting.

WARNING! Never undercut a high bank. The edges could collapse or a slide could occur, resulting in death or serious injury.

Work the jobsite in a manner that avoids creating overhangs or the need to be on top of banks or slopes. Never operate the machine close to the edge of an overhang or stockpile.

Extreme caution should be used when working along the top of banks and slopes. Keep as far back from the edge as possible. Level the area if possible. Keep the machine tracks perpendicular to the edge so that if part of the edge collapses, the machine can be moved back.

Immediately move the machine back at any indication the edge may be unstable.

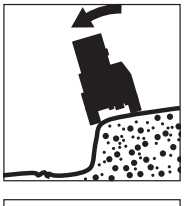

Use Caution – Stay Safely Away From Bank Or Excavation Edge



Never Undercut A High Bank



Operate Perpendicular To Banks – Stay Back From The Edge

Operate Safely

WARNING! Do not dig under the machine. A cave-in could result and the machine could fall into the excavation, resulting in death or serious injury.

Avoid Silica Dust

Cutting or drilling concrete or rock containing quartz may result in exposure to silica dust. **Do not exceed Permissible Exposure Limits (PEL) to silica dust as determined by OSHA or other worksite rules and regulations.** Use a respirator, water spray or other means to control dust. Silica dust can cause lung disease and is known to cause cancer.

Operation In Flammable/Explosive Atmosphere

WARNING! Avoid possible death or serious injury. **Never operate an excavator in these areas. Use of these excavators in explosive atmospheres can result in fires and explosions, causing death or serious injury.**



Use Caution Near Excavation Edge – Do Not Undercut Machine



Avoid Silica Dust

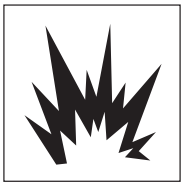

Do Not Operate In Explosive/Flammable Atmosphere

.

Operate Safely

Towing

Many compact excavators may not be towed. Refer to the manufacturer's manual(s) for specific towing instructions.

Never straddle a tow line or stand near a tow line under tension.

Parking

Park the machine in a designated area out of traffic, preferably on level ground. (See page 39, **Machine Shutdown**.)

If freezing conditions are expected, the tracks should be first cleared of mud and dirt and the machine parked on planks or suitable debris.

Public roads are not suitable for parking. If the machine is disabled or you must park on a public road, barricade and mark the machine according to local and worksite regulations.

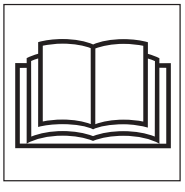

Consult Manufacturer's Manual Before Towing

Shut Down Safely

Machine Shutdown

Properly shutting down a compact excavator can help prevent accidents when the machine is left unattended. Shut down the excavator following the specific procedures in the manufacturer's operator manual.

A typical list includes:
— Stop the machine.
— Make sure the area around the machine is clear of personnel.
— Slew the machine to align the upperstructure with the undercarriage, if possible.
— Return controls to neutral, including the auxiliary hydraulic controls.
— Lower the attachment and blade to the ground with slight down-pressure.
— Idle engine for a short cool-down period.
— Stop the engine.
— Cycle all hydraulic controls to relieve system pressure.
— Engage the control locking device, if equipped.
— Remove ignition key.
— Block the tracks if on a slope or incline.
— Check for and clean out trash build-up, especially in the engine compartment, battery box, around exhaust components, in confined spaces, under the machine and around rotating components.

Safe Dismounting

Never dismount from moving equipment. Observe proper shutdown practices before dismounting. Check for slippery steps and handholds.

Dismount carefully using three-point contact facing the machine. (See page 21, **Mount And Dismount Properly**.)

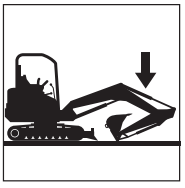

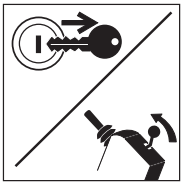

Load And Unload The Machine Safely

Loading And Unloading For Transport

All machines are not loaded in the same way, and the procedures given in the manufacturer's manual(s) should always be followed.

Some precautions apply to all machines:
— Keep bystanders away.
— Wear the seat belt, if equipped.
— If the compact excavator is equipped with a foldable TOPS/ROPS, make sure it is properly secured in the raised position.
— Place transport vehicle on a firm, level surface.
— Block or support the rear of the trailer.
— Secure the parking brake and block transport vehicle so it cannot move.
— Use ramps with slip-resistant surfaces, adequate size and strength, low angle (15 degrees or less) and proper height.
— Keep trailer bed and ramps clear of mud, oil, ice, snow, leaves and other debris.
— Position the attachment to the front of the machine.
— Drive forward up the ramps, raising the blade high enough for clearance.
— Cover or remove any SMV (Slow-Moving Vehicle) emblem.
— Secure the cab door, attachment and accessories in the transport position.
— Engage upperstructure slew lock, if equipped.
— Chain and block the excavator securely for transport. Refer to the manufacturer's operator manual for tie-down procedures.

Measure the transport height and width of the loaded machine to avoid overhead and width obstructions. Make sure clearance flags, all lights and warning signs are in place and visible.

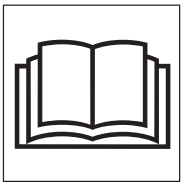

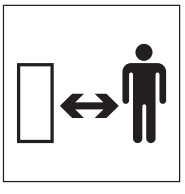

Perform Maintenance Safely

Maintain Equipment

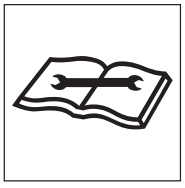



Be sure to maintain equipment according to manufacturer's instructions. Regularly check the operation of the protective and safety devices.

Do not perform any work on the compact excavator unless you are authorized and qualified to do so.

If you have been authorized to maintain the equipment, **read the operator, maintenance and service manuals.** Study the instructions, check the lubrication charts and examine all the instruction messages on the machine. Maintenance can be dangerous unless performed properly. Be sure you have the necessary skill, information, tools and equipment to do the job correctly.

If adjustments must be made with the engine running, always work as a 2-person team with one person sitting in the operator's seat while the other works on the machine.

IMPORTANT! Do not modify equipment or add components not approved by the manufacturer. Use parts, lubricants and service techniques recommended by the manufacturer.

Protect Yourself

Wear personal protective clothing and Personal Protective Equipment (PPE) issued to you or called for by job conditions.

You may need:
— Hard hat
— Safety boots with non-slip soles
— Safety glasses, goggles or face shield
— Apron and heavy-duty gloves
— Hearing protection
— Welding helmet or goggles
— Respirator or filter mask

Wear whatever is needed to protect yourself—do not take chances.

Perform Maintenance Safely

WARNING! Prevent death or serious injury from entanglement. **Do not wear loose clothing or accessories. Restrain long hair. Stay away from all rotating components when the engine is running.** Contact with or entanglement in rotating or moving parts could result in death or serious injury.

Wear a rubber apron and rubber gloves when working with corrosives. Wear gloves and safety shoes when handling wooden blocks, wire rope or sharp-edged metal.

Always use safety glasses, goggles or a face shield. They provide eye protection from fluids under pressure, during grinding and while servicing batteries. Protection is also needed from flying debris, liquids and loose material produced by equipment, tools and pressurized air/water/oil/fuel.

Wear a face shield when you disassemble spring-loaded components or work with battery acids. Wear a welding helmet or goggles with a shaded filter when you weld or cut with a torch.

Do not sand, grind, flame-cut, braze or weld without an approved respirator or appropriate ventilation. If welding is required on the machine, refer to the manufacturer's manuals or consult the equipment dealer for proper procedures. Make sure all flammable material is cleared from the area.

Keep pockets free of all objects that could fall out and drop into machinery.

Handle tools and heavy parts sensibly, with regard for yourself and other persons. Lower items—do not drop them.





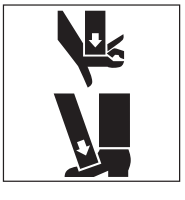



Perform Maintenance Safely

Prepare The Work Area

— Position the compact excavator in a level area out of the way of other working equipment.
— Make sure there is adequate light, ventilation and clearance.
— Remove oil, grease, ice and snow or water to eliminate any slippery surfaces.
— Clean around the machine and work area to minimize contamination. Clean up oil or fuel spills promptly and dispose of the material properly.

Prepare The Machine

— Attach a “DO NOT OPERATE” warning tag to the control levers and remove the ignition key if the machine should not be started.
— Block the tracks.
— Release all hydraulic, water and air pressure. Lower, lock or block all hydraulically supported components.

WARNING! Disconnecting or loosening any hydraulic component or a part failure can cause unsupported equipment to drop. **Do not go under or near raised equipment unless supported by a manufacturer-approved support device(s).** Death or serious injury could result from falling equipment.

— Remove only guards or covers that provide access to the area being serviced. Replace all guards and covers when work is complete.

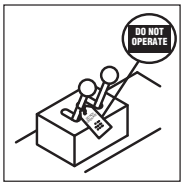

Use Warning Tags

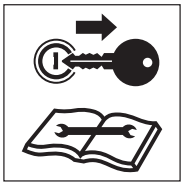

Remove Key And Read Maintenance Manual



Use Approved Support Device

Perform Maintenance Safely

Use Approved Ventilation

If it is necessary to run an engine in an enclosed area, remove the exhaust fumes from the area with an exhaust pipe extension.

WARNING! Prevent possible injury. **Never work on machinery with the engine running unless instructed by the manufacturer’s manuals for specific service.**

WARNING! Never operate any type of engine without approved ventilation—EXHAUST FUMES CAN KILL.



Ventilate Work Area

Use Jacks And Hoists Carefully

If you must work beneath raised equipment, use solid wood blocks, jack-stands or other rigid and stable supports. Never use concrete blocks. When using jacks or hoists, always be sure they are adequately supported and of adequate capacity.

Make sure the hoists or jacks you use are in good repair. Never use jacks with cracked, bent or twisted parts. Never use frayed, twisted or pinched cables. Never use bent, worn or distorted hooks.

Protective Structure Safety

Do not remove or modify a protective structure (TOPS/ROPS, FOGS/FOPS OPS) except for service. Reinstall with manufacturer-approved fasteners before further machine operation.

Replace a damaged protective structure. Refer to the manufacturer’s manual for specific instructions and inspection requirements.

Perform Maintenance Safely

Common Maintenance Safety Practices

Fuel Hazards

IMPORTANT! Always use approved fuel containers and dispensing equipment.

Fuels are flammable, so observe these practices to reduce the possibility of a serious accident.
— Shut off engine and ignition before refueling.
— Always ground the fuel nozzle against the filler neck to avoid sparks.
— Keep sparks and open flames away from fuel.
— Do not use a cell phone or two-way radio while fueling or handling fuel—they could cause sparks.
— Do not smoke while refueling or when handling fuel containers.
— Do not cut or weld on or near fuel lines, tanks or containers.
— Do not overfill the tank or spill fuel. Clean up spilled fuel immediately.

Always use a nonflammable solvent when you clean parts. Do not use gasoline, diesel fuel or other flammable fluids.

Store all flammable fluids and materials away from work areas in suitable containers, per local regulations.

Cooling System Hazards

Liquid cooling systems build up pressure as the liquid gets hot, so **use extreme caution** before removing the radiator or tank cap. Be sure to:
— Stop the engine and wait for the system to cool.
— Wear protective clothing and safety glasses.
— Turn the radiator or tank cap slowly to the first stop to allow the pressure to escape before removing the cap completely.



Perform Maintenance Safely

Hydraulic System Hazards

The hydraulic system is under pressure whenever the engine is running and may hold pressure even after the engine is shut off. Cycle all hydraulic controls, including auxiliary controls, after the engine is shut down to relieve trapped pressure in the lines.

During inspection of the hydraulic system:
— Wait for fluid to cool before disconnecting the lines. Hot hydraulic fluid can cause SEVERE BURNS.
— **Do not** use your hand to check for leaks.
— Wear appropriate eye protection. Hydraulic fluid can cause permanent eye injury.

WARNING! Diesel fuel and hydraulic fluid under pressure can penetrate the skin or eyes and cause serious injury, blindness or death. Fluid leaks under pressure may not be visible. **Use a piece of cardboard or wood to find leaks, not your hand. Wear a face shield or safety goggles for eye protection.** If fluid is injected into the skin, it must be removed within a few hours by medical personnel familiar with this type of injury.

When venting or filling the hydraulic system, loosen the filler cap slowly and remove it gradually.

Never reset any relief valve in the hydraulic system to a pressure higher than recommended by the manufacturer.

Follow manufacturer's instructions when taking oil samples.

Do not permit an open flame around the hydraulic system.

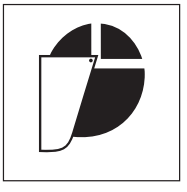





Perform Maintenance Safely

Electrical System Hazards

Before working on the electrical system, disconnect the battery cable(s).

— Remove the battery negative (-) cable(s) first.
— When reconnecting the battery, connect the battery negative (-) cable(s) last.

Battery electrolyte contains acid, which is a POISON and can cause SEVERE CHEMICAL BURNS.

Avoid Injury

— Wear a face shield to prevent electrolyte contact with your eyes.
— Wear chemical-resistant gloves and clothing to keep electrolyte off your skin and regular clothing.

WARNING! Electrolyte will damage eyes or skin on contact. **Always wear a face shield to avoid getting electrolyte in eyes.** If electrolyte contacts eyes, flush immediately with clean water and get medical attention. **Wear rubber gloves and protective clothing to keep electrolyte off skin.** If electrolyte contacts exposed skin or clothing, wash off immediately with clean water.

If electrolyte is ingested, seek MEDICAL ATTENTION IMMEDIATELY. NEVER give fluids that would induce vomiting.

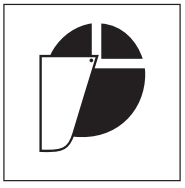

Wear Face Protection



Wear Protective Clothing

Perform Maintenance Safely

Avoid Battery Explosion

WARNING! Avoid possible death or serious injury from explosion. Lead-acid batteries produce extremely explosive gases, especially when being charged. **Keep arcs, sparks, flames and lighted tobacco away.**

— **Do not** smoke near batteries.
— Check battery cables for worn or damaged insulation.
— Keep arcs, sparks and open flames away from batteries.
— Provide adequate ventilation.

Never check the battery by placing a metal object across the battery posts; the resulting spark could cause an explosion.

WARNING! Avoid possible death or serious injury from battery explosion. **Do not charge a battery or boost-start the engine if the battery is frozen. Warm to 60°F (15.5°C) or the battery may explode.**

Safety rules during battery boost-starting:

— Follow the instructions for proper “battery boost-starting” as specified in the manufacturer’s manual.
— Be sure the machines are not touching.
— Observe the polarity of the batteries and connections.
— Make the final cable connection to the engine or the ground point farthest from the battery and away from fuel lines. Never make the final connection at the starter or dead battery—sparks may ignite the explosive gases present at the battery.
— When disconnecting cables after boost-starting, remove the cables in reverse order of connection (i.e., final connection first).

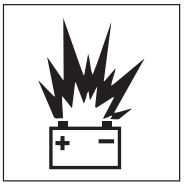

Avoid Sparks And Open Flames Near Batteries



Observe Polarity – Make Final Connection At Ground Point

Perform Maintenance Safely

Track Maintenance And Adjustment

Check the tracks daily because the stability of the compact excavator can be dramatically affected by damage to tracks.

Check for:
— Damage or wear
— Correct tension according to manufacturer's instructions
— Proper lubrication of track rollers and idlers—refer to the manufacturer's manuals.

Track tension is important for good performance, reducing excessive track wear and preventing the tracks from coming off. Track and roller wear varies with working conditions and soil conditions. Special tools and procedures may be needed to check or adjust track tension. Follow manufacturer's specific service procedure(s) when removing and installing tracks.

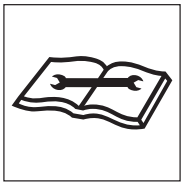



WARNING! Track tensioning systems have compressed springs or pressurized fluid (oil or grease). Improperly releasing track tension forces can result in death or serious injury. **Always follow the manufacturer's warnings and instructions for track adjustment and other maintenance and servicing procedures.**

WARNING! Avoid possible death or serious injury. **Never strike or pound on track tension springs.** They may be under very high compression and could shatter explosively.

Perform Maintenance Safely

Complete Service And Repairs Before Machine Is Released

Tighten all bolts, fittings and connections to torques specified by the manufacturer.

Clean or replace all damaged, missing or painted-over signs, plates and decals that cannot be read.

Inspect and install all guards, covers and shields after servicing. Replace or repair any damaged parts. Refill and recharge pressure systems only with manufacturer-approved or recommended fluids.

Check readiness of fire extinguishers, if so equipped. Do not paint over or otherwise interfere with fire detectors or fire extinguisher access points.

Follow the instructions in the manufacturer's manual(s) for proper service of any fire suppression equipment on the machine.

Air conditioning service is limited to approved service personnel. Refer to the manufacturer's manual(s).



Start the engine and check for leaks. (See page 46, **Hydraulic System Hazards**.) Operate all controls to make sure the machine is functioning properly. Test the machine if necessary. After testing, shut down and check the work you performed. Are there any missing cotter pins, washers, locknuts, etc.? Recheck all fluid levels before releasing the compact excavator for operation.

All parts should be inspected during repair and replaced if worn, cracked or damaged. Excessively worn or damaged parts can fail and cause death or injury.

Final Word To The User

You have just finished reading the AEM Compact Excavator Safety Manual. It is impossible for this manual to cover every safety situation you may encounter on a daily basis. Knowledge of these safety precautions and your application to the basic rules of safety will help to build good judgment in all situations. Our objective is to help you develop, establish and maintain good safety habits to make operating a Compact Excavator easier and safer for you.

This manual is another in a series on the safe operation of machinery published by AEM.
Many pictorials in this safety manual can be found and downloaded at http://pictorials.aem.org.
For additional publications visit our website at www.safetymaterials.org.

ASSOCIATION OF
EQUIPMENT MANUFACTURERS

e-mail safetymaterials@aem.org
www.aem.org

FORM CE-1009
Printed in U.S.A.

EMISSION SYSTEM WARRANTY

YANMAR POWER TECHNOLOGY CO., LTD.
LIMITED EMISSION CONTROL SYSTEM WARRANTY – USA ONLY

Your Warranty Rights and Obligations:

The California Air Resources Board (CARB), the United States Environmental Protection Agency (EPA) and YANMAR POWER TECHNOLOGY CO., LTD. hereafter referred to as YANMAR, are pleased to explain the emission control system warranty on your 2023, 2024, or 2025 model year compression-ignition engine. In California, new heavy-duty off-road engines must be designed, built and equipped to meet the State's stringent anti-smog standards. In the remaining forty nine (49) states, new non-road compression-ignition engines must be designed, built and equipped to meet the United States EPA emissions standards. YANMAR must warrant the emission control system on your engine for the periods of time listed below provided there has been no abuse, neglect or improper maintenance of your engine.

Your emission control system may include parts such as the fuel injection system, the air induction system, the electronic control system, EGR (Exhaust Gas Recirculation) system and the exhaust gas after treatment (diesel particulate filter system, urea SCR system). Also included may be hoses, belts, connectors and other emission-related assemblies.

Where a warrantable condition exists, YANMAR will repair your heavy-duty off-road compression-ignition engine at no cost to you including diagnosis, parts and labor.

Manufacturer's Warranty Coverage:

2023, 2024, or 2025 model year heavy-duty off-road compression-ignition engines are warranted for the periods listed below. If any emission-related part on your engine is defective, the part will be repaired or replaced by YANMAR.

If your engine is certified as	And its maximum power is	And its rated speed is	Then its warranty period is
Variable speed or constant speed	kW < 8	Any speed	2,000 hours or two (2) years whichever comes first. In the absence of a device to measure the hours of use, the engine has a warranty period of two (2) years.
Variable speed or constant speed	8 ≤ kW < 19	Any speed	2,000 hours or two (2) years whichever comes first. In the absence of a device to measure the hours of use, the engine has a warranty period of two (2) years.
Constant speed	19 ≤ kW < 37	3,000 rpm or higher	2,000 hours or two (2) years whichever comes first. In the absence of a device to measure the hours of use, the engine has a warranty period of two (2) years.
Constant speed	19 ≤ kW < 37	Less than 3,000 rpm	3,000 hours or five (5) years whichever comes first. In the absence of a device to measure the hours of use, the engine has a warranty period of five (5) years.
Variable speed	19 ≤ kW < 37	Any speed	3,000 hours or five (5) years whichever comes first. In the absence of a device to measure the hours of use, the engine has a warranty period of five (5) years.
Variable speed or constant speed	kW ≥ 37	Any speed	3,000 hours or five (5) years whichever comes first. In the absence of a device to measure the hours of use, the engine has a warranty period of five (5) years.

Wacker Neuson Linz GmbH
Flughafenstraße 7
A-4063 Hörsching

Tel.: +43 7221 63000
Email: office.linz@wackerneuson.com

Material Number: 1000507598
Language: [en-US]