TECHNICAL DATA

SINGLE DRUM ROLLERS

BW 177 D-5 PL, BW 177 DH-5 PL, BW 177 PDH-5 PL



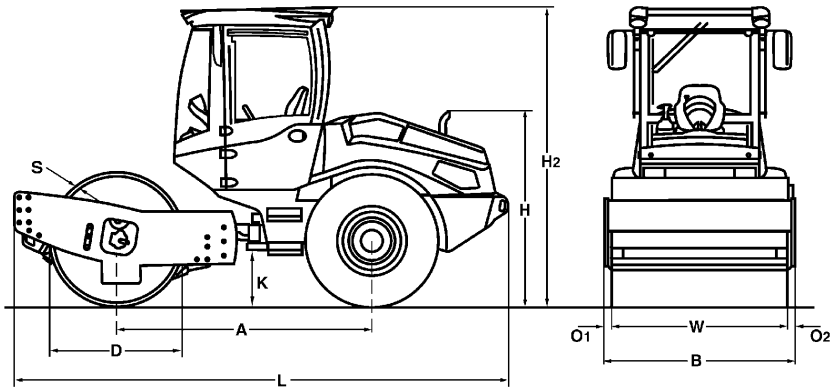

Dimensions in mm

	A	B	D	H	H2	K	L	O1	O2	S	W
BW 177 D-5 PL	2350	1820	1230	1655	2800	380	4540	65	65	20	1690
BW 177 DH-5 PL	2350	1820	1230	1750	2800	380	4540	65	65	20	1690
BW 177 PDH-5 PL	2350	1820	1210	1750	2800	380	4540	65	65	15	1690

Shipping dimensions in m3	**without ROPS**	**with ROPS**
BW 177 D-5 PL	13,675	23,136
BW 177 DH-5 PL	14,460	23,136
BW 177 PDH-5 PL	14,460	23,136

Machine type	**Compaction output (m3/h)**			
	Rock fill	**Gravel, sand**	**Mixed soil**	**Silt, clay**
BW 177 D-5 PL	-	210-420	160-320	70-140
BW 177 DH-5 PL	-	210-420	160-320	70-140
BW 177 PDH-5 PL	-	210-420	160-320	95-190

Machine type	**Compacted layer thickness (m)**			
	Rock fill	**Gravel, sand**	**Mixed soil**	**Silt, clay**
BW 177 D-5 PL	-	0,45	0,35	0,15
BW 177 DH-5 PL	-	0,45	0,35	0,15
BW 177 PDH-5 PL	-	0,45	0,35	0,20

Technical Data		BOMAG BW 177 D-5 PL	BOMAG BW 177 DH-5 PL	BOMAG BW 177 PDH-5 PL
Weights				
Grossweight	kg	7.800	8.200	7.600
Operating weight CECE w. ROPS-cabin	kg	6.600	6.700	6.950
Axle load, drum CECE	kg	4.000	4.050	4.300
Axle load, wheels CECE	kg	2.600	2.650	2.650
Static linear load CECE	kg/cm	23,7	24,0	
Dimensions				
Working width	mm	1.690	1.690	1.690
Track radius, inner	mm	2.975	2.975	2.975
Driving Characteristics				
Speed (1)	km/h	0- 4,5	0- 4,5	0-10
Speed (2)	km/h	0- 5,5	0- 5,5	
Speed (3)	km/h	0- 7,5	0- 7,5	
Speed (4)	km/h	0- 10,5	0- 10,5	
Max. gradeability without/with vibr.	%	49/46	61/58	61/58
Drive				
Engine manufacturer		Kubota	Kubota	Kubota
Type		V3307DI-T	V3307DI-T	V3307DI-T
Emission stage		Stage IIIa / TIER3	Stage IIIa / TIER3	Stage IIIa / TIER3
Cooling		Liquid	Liquid	Liquid
Number of cylinders		4	4	4
Performance ISO 3046	kW	55,4	55,4	55,4
Performance SAE J 1995	hp	75,0	75,0	75,0
Speed	min-1	2.400	2.400	2.400
Fuel		Diesel	Diesel	Diesel
Electric equipment	V	12	12	12
Drive system		hydrost.	hydrost.	hydrost.
Drum driven		standard	standard	standard
Drums and Tyres				
Tyre size		14.9-24/8PR	14.9-24/8PR	14.9-24/8PR
Brakes				
Service brake		hydrost.	hydrost.	hydrost.
Parking brake		hydromec.	hydromec.	hydromec.
Steering				
Steering system		oscil.artic.	oscil.artic.	oscil.artic.
Steering method		hydrost.	hydrost.	hydrost.
Steering / oscillating angle +/-	grad	35/12	35/12	35/12
Exciter system				
Drive system		hydrost.	hydrost.	hydrost.
Frequency (1)	Hz	29	29	29
Frequency (2)	Hz	32	32	32
Amplitude	mm	1,90/0,80	1,90/0,80	1,75/0,88
Centrifugal force	kN	112/74	112/74	112/74
Centrifugal force	t	11,4/7,5	11,4/7,5	11,4/7,5
Capacities				
Fuel	l	110,0	110,0	110,0

Technical modifications reserved. Machines may be shown with options.

Standard Equipment

- ☑ BOMAG ECOMODE
- ☑ Double pump system for travel drive (DH/PDH)
- ☑ Self locking differential
- ☑ Rear axle with twin spring accumulator brakes
- ☑ Hydrostatic travel and vibration drive
- ☑ Hydrostatic articulated steering
- ☑ Articulated joint lock
- ☑ Warning, information and operation displays
- ☑ Single lever control for travel and vibration
- ☑ Back-up warning system
- ☑ 2 Contact scrapers Plastic (D/DH)
- ☑ 2 Scraper (PDH)
- ☑ Tractor tires (PDH)

Optional Equipment

- ☐ ROPS cabin with seat belts
- ☐ ROPS/FOPS with safety belt
- ☐ Tractor tires (D/DH)
- ☐ Indicator and hazard lights
- ☐ Rotary beacon
- ☐ Rearview camera
- ☐ Air condition
- ☐ Adjustable steering column
- ☐ Sliding window
- ☐ Radio (DAB)
- ☐ BOMAG ECOSTOP
- ☐ ECONOMIZER
- ☐ TERRAMETER
- ☐ BOMAG TELEMATIC
- ☐ Special painting
- ☐ Backup warning buzzer with broadband technology
- ☐ Padfoot segment kit (D/DH)
- ☐ Dozer blade (DH/PDH)
- ☐ Environmentally compliant hydraulic oil
- ☐ Measuring- and machine data interface for third-party suppliers
- ☐ LED Working lights (Cabin)
- ☐ 360° Camera system

BOMAG
Hellerwald
D-56154 Boppard
P.O. Box 5162
Tel. (0)6742 - 1000
Fax (0)6742 - 3090

BOMAG
FAYAT GROUP