BOMAG
FAYAT GROUP

Operating Instruction
Maintenance Instruction

Original Operating Instructions

BW 177 DH-5

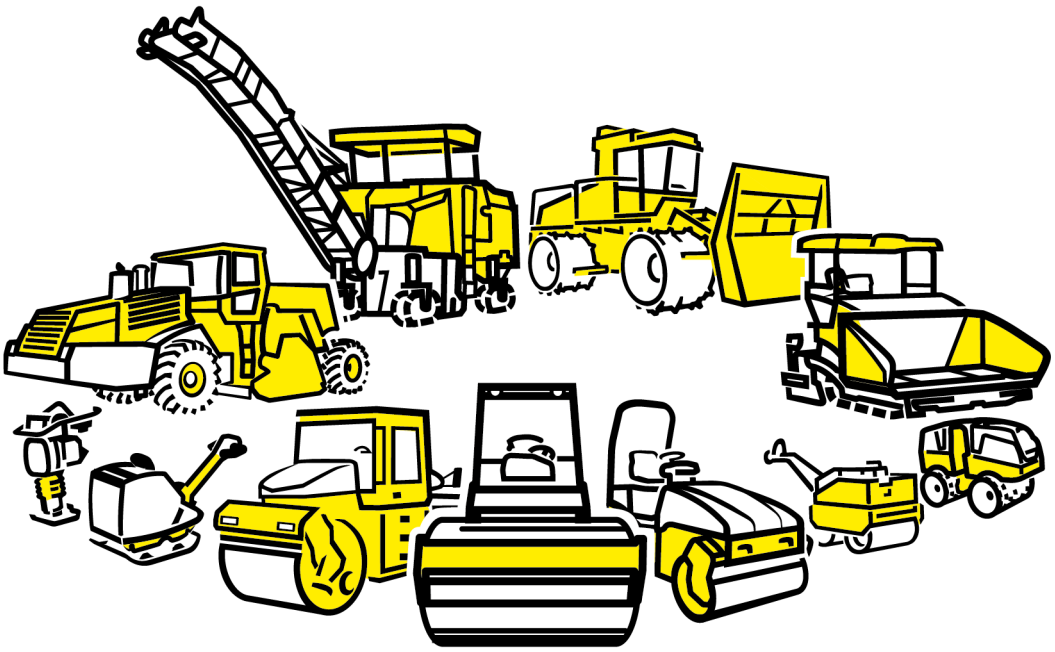

S/N 101 586 51 1034>

Single drum roller

008 201 79 EN

© 03/2020

⚠ **WARNING:** Breathing diesel engine exhaust exposes you to chemicals known to the State of California to cause cancer and birth defects or other reproductive harm.

- Always start and operate the engine in a well-ventilated area.
- If in an enclosed area, vent the exhaust to the outside.
- Do not modify or tamper with the exhaust system.
- Do not idle the engine except as necessary.

For more information go to www.P65warnings.ca.gov/diesel.

⚠ **WARNING:** Crude oil, gasoline, diesel fuel and other petroleum products can expose you to chemicals including toluene and benzene, which are known to the State of California to cause cancer and birth defects or other reproductive harm.
These exposures can occur in and around oil fields, refineries, chemical plants, transport and storage operations such as pipelines, marine terminals, tank trucks and other facilities and equipment.

For more information go to www.P65Warnings.ca.gov/petroleum.

Table of contents

1 Introduction **11**
1.1 Foreword **12**
1.2 Machine type plate and engine type plate **14**
2 Technical data **15**
2.1 Noise and vibration data **19**
2.1.1 Noise data 19
2.1.2 Vibration data 19
3 Concerning your safety **21**
3.1 Basic prerequisites **22**
3.1.1 General 22
3.1.2 Explanation of signal words used: 23
3.1.3 Personal protective equipment 24
3.1.4 Intended use 25
3.1.5 Improper use 25
3.1.6 Estimated service life of the machine 26
3.2 Definition of responsible persons **27**
3.2.1 Operating company 27
3.2.2 Expert / qualified person 27
3.2.3 Driver / operator 28
3.3 Fundamentals for safe operation **29**
3.3.1 Remaining dangers, remaining risks 29
3.3.2 Regular safety inspections 29
3.3.3 Modifications and alterations to the machine 29
3.3.4 Damage, defects, misuse of safety devices 30
3.3.5 Roll Over Protective Structure (ROPS) 30
3.4 Handling fuels and lubricants **32**
3.4.1 Preliminary remarks 32
3.4.2 Safety regulations and environmental protection regulations for handling diesel fuel 33
3.4.3 Safety regulations and environmental protection regulations for handling oil 35
3.4.4 Safety regulations and environmental protection regulations for handling hydraulic oil 36

3.4.5 Safety regulations and environmental protection regulations for handling coolants ... 38
3.4.6 Safety regulations and environmental protection regulations for handling battery acid ... 40
3.5 Load/transport the machine ... 42
3.6 Starting up the machine ... 44
3.6.1 Prior to commissioning ... 44
3.6.2 Starting the engine ... 45
3.6.3 Starting the engine with jump leads ... 45
3.7 Driving the machine; working operation ... 47
3.7.1 Driving the machine ... 47
3.7.2 Driving up and down slopes ... 48
3.7.3 Cross-slope ... 48
3.7.4 Working with vibration ... 49
3.7.5 Parking the machine ... 49
3.8 Refuelling ... 50
3.9 Emergency procedures ... 51
3.9.1 Actuating the emergency stop switch ... 51
3.9.2 Disconnecting the battery ... 51
3.9.3 Towing the machine ... 51
3.10 Maintenance work ... 53
3.10.1 Preliminary remarks ... 53
3.10.2 Working on hydraulic lines ... 53
3.10.3 Working on the engine ... 54
3.10.4 Maintenance work on electric components and battery ... 55
3.10.5 Working on the air conditioning ... 55
3.10.6 Working on wheels and tyres ... 55
3.10.7 Cleaning work ... 56
3.10.8 Measures for longer shut-down periods ... 56
3.10.9 After maintenance work ... 57
3.11 Repair ... 58
3.12 Signage ... 59
3.13 Danger zones ... 67
3.14 Safety Components ... 68

4 Indicators and control elements **71**
4.1 Driver's stand **72**
4.1.1 Instrument cluster 72
4.1.2 Operating console 78
4.1.3 Travel lever 83
4.1.4 Travel lever with dozer blade control 84
4.1.5 Driver's seat 86
4.2 Cabin **90**
4.2.1 Control console cabin 90
4.2.2 Heating / air conditioning 91
4.2.3 12 V DIN socket 93
4.2.4 Monitor for reversing camera 94
4.2.5 Fire extinguisher 95
4.3 Engine compartment **96**
4.3.1 Main battery switch 96
4.4 Outside of machine **97**
4.4.1 Reversing camera 97
5 Checks prior to start up **99**
5.1 Notes on safety **100**
5.2 Visual inspections and function tests **102**
5.3 Checking the engine oil level **103**
5.4 Checking the fuel level; topping up fuel **104**
5.4.1 Checking the fuel level 104
5.4.2 Refuelling 104
5.5 Checking the hydraulic oil level **106**
5.6 Checking the coolant level **107**
5.7 Checking wheels and tyres **109**
6 Operation **111**
6.1 Setting up the workplace **112**
6.2 Electronic immobilizer **113**
6.3 Starting the engine **114**
6.4 Travel mode **116**
6.4.1 Preliminary remarks and safety notes 116
6.4.2 Driving the machine 117

6.4.3 Applying the parking brake ... 118
6.5 Working with vibration ... 119
6.5.1 Preliminary remarks and safety notes ... 119
6.5.2 Switching the vibration on and off ... 120
6.6 ECONOMIZER ... 122
6.7 Terrameter ... 123
6.7.1 Terrameter display ... 123
6.7.2 Terrameter with printer ... 124
6.7.3 Line graph (E_{VIB}) ... 128
6.8 Parking the machine in secured condition ... 131
6.9 Operating the heating / air conditioning system ... 132
6.10 ECOSTOP ... 133
6.11 Emergency procedures ... 135
6.11.1 Actuating the emergency stop switch ... 135
6.11.2 Machine stops in case of faults ... 136
6.11.3 Disconnecting the battery ... 137
6.11.4 Towing the machine ... 137
6.11.5 After towing ... 139
7 Loading / transporting the machine ... 141
7.1 Prepare for transport ... 142
7.2 Loading the machine ... 143
7.3 Lashing the machine to the transport vehicle ... 145
7.4 Loading by crane ... 146
7.5 After transportation ... 148
8 Maintenance ... 149
8.1 Preliminary remarks and safety notes ... 150
8.2 Preparations / concluding work ... 152
8.2.1 Open and secure the engine hood ... 152
8.2.2 Engaging / releasing the articulation lock ... 153
8.2.3 Removing / installing the protective covering of the belt drive ... 155
8.3 Fuels and lubricants ... 156
8.3.1 Engine oil ... 156
8.3.2 Fuel ... 157
8.3.3 Coolant ... 158

8.3.4 Hydraulic oil..... 160
8.3.5 Gear oil SAE 75W-90..... 161
8.3.6 Gear oil SAE 80W-140..... 161
8.4 List of fuels and lubricants..... **162**
8.5 Running-in instructions..... **164**
8.5.1 General..... 164
8.5.2 After 50 operating hours..... 164
8.5.3 After 250 operating hours..... 164
8.5.4 After 500 operating hours..... 165
8.5.5 After 1000 operating hours..... 165
8.6 Maintenance Table..... **167**
8.7 Every 250 operating hours..... **169**
8.7.1 Checking the rubber buffers..... 169
8.7.2 Check the air intake lines..... 170
8.7.3 Checking radiator hoses and hose clamps..... 171
8.7.4 Service the belt drive..... 171
8.7.5 Cleaning the radiator module..... 174
8.7.6 Checking the oil level in the drive axle..... 176
8.7.7 Checking the oil level in the wheel hubs..... 176
8.7.8 Checking the oil level in the exciter housing..... 177
8.7.9 Checking the oil level in the drum drive reduction gear..... 179
8.7.10 Changing the fresh air filter in the cabin..... 180
8.7.11 Check the parking brake..... 181
8.8 Every 500 operating hours..... **182**
8.8.1 Change engine oil and oil filter cartridge..... 182
8.8.2 Replacing the fuel filter, bleeding the fuel system..... 184
8.8.3 Replacing the V-belt..... 186
8.8.4 Checking the anti-freeze concentration and the condition of the coolant..... 188
8.8.5 Checking the hydraulic lines..... 189
8.8.6 Servicing the battery, checking the battery isolation..... 190
8.8.7 Servicing the air conditioning system..... 191
8.9 Every 1000 operating hours..... **194**
8.9.1 Adjusting the valve clearance..... 194
8.9.2 Checking the engine mounts..... 197

8.9.3 Replacing the hydraulic oil filter..... 197
8.9.4 Change the oil in the drive axle..... 200
8.9.5 Changing the oil in the wheel hubs..... 202
8.9.6 Change the oil in the exciter housing..... 203
8.9.7 Change the oil in the drum drive reduction gear..... 205
8.9.8 Retightening the fastening of the axle on the frame..... 206
8.9.9 Retightening the wheel nuts..... 207
8.9.10 Checking the ROPS..... 207
8.9.11 Checking the travel lever control..... 208
8.9.12 Cleaning the circulation air filter of the heating..... 208
8.10 Every 2000 operating hours..... 209
8.10.1 Changing the hydraulic oil..... 209
8.10.2 Changing the coolant..... 211
8.10.3 Replacing the fuel lines..... 214
8.10.4 Replacing injection nozzles..... 214
8.11 Every 3000 operating hours..... 215
8.11.1 Checking the turbo charger..... 215
8.11.2 Checking the fuel injection pump..... 215
8.12 As required..... 216
8.12.1 Air filter maintenance..... 216
8.12.2 Checking and cleaning the water separator..... 219
8.12.3 Adjusting the scrapers..... 221
8.12.4 Cleaning the machine..... 222
8.12.5 Filling the windscreen washer tank..... 223
8.12.6 Replacing the paper roll in the printer..... 223
8.12.7 Drain the fuel tank sludge..... 224
8.12.8 Measures prior to extended shut-down period..... 224
9 Setting up / refitting..... 229
9.1 Attaching the padfoot shells..... 230
9.1.1 Preliminary remarks and safety notes..... 230
9.1.2 Preparations..... 231
9.1.3 Removing the scrapers..... 232
9.1.4 Attaching segments..... 235
9.1.5 Attaching the scrapers..... 240
9.2 Removing the padfoot shells..... 243

9.2.1 Preliminary remarks and safety notes 243
9.2.2 Preparations 243
9.2.3 Removing the scrapers 244
9.2.4 Removing segments 246
9.2.5 Attaching the scrapers 249
10 Troubleshooting 251
10.1 Preliminary remarks 252
10.2 Starting the engine with jump leads 253
10.3 Fuse assignment 254
10.3.1 Notes on safety 254
10.3.2 Central electrics 254
10.3.3 Main fuses 255
10.3.4 Control console cabin 256
10.4 Fault code display 257
10.5 Engine faults 258
11 Disposal 261
11.1 Final shut-down of machine 262
12 List of special tools 263

Table of contents

1 Introduction

1.1 Foreword

BOMAG manufactures machines for earth, asphalt and refuse compaction, stabilizers/ recyclers as well as planers and pavers.

BOMAG's vast experience in connection with state-of-the-art production and testing methods, such as lifetime tests of all important components and highest quality demands guarantee maximum reliability of your machine.

These operating and maintenance instructions are part of your machine.

They provide necessary information to operate your machine safely and properly.

They also contain information on required operating, maintenance and repair measures.

Carefully read the operating and maintenance instructions before taking your machine into operation.

Please observe the safety regulations strictly and follow all instructions to ensure safe operation.

If you are not yet acquainted with the controls and indicating elements on this machine, you should thoroughly read the corresponding chapter ↬ *Chapter 4 'Indicators and control elements' on page 71*.

The description of the individual operating steps including the notes on safety to be followed can be found in chapter "Operation" ↬ *Chapter 6 'Operation' on page 111*.

Before every start up, carry out all required visual inspections and function tests ↬ *Chapter 5 'Checks prior to start up' on page 99*.

Ensure the compliance with the specified operating, maintenance and repair measures to maintain the functional safety of your machine.

A description of all necessary maintenance work, maintenance intervals as well as information on fuels and lubricants can be found in the chapter “Maintenance” ↬ *Chapter 8 ‘Maintenance’ on page 149*.

Do not service or repair your machine by yourself to avoid harming persons or damaging material or environment.

The machine must only be serviced and repaired by qualified and authorized personnel.

Contact our Customer Service to carry out the required maintenance work or necessary repairs.

In case of operating errors, inadequate maintenance or the use of unapproved fuels and lubricants all warranty claims will become null and void.

For your own personal safety you should only use original parts from BOMAG.

For your machine we offer service kits to make maintenance easier.

In the course of technical development we reserve the right for technical modifications without prior notification.

These operating and maintenance instructions are also available in other languages.

Apart from that, you can also order the spare parts catalogue against the serial number of your machine.

The above notes do not constitute an extension of the warranty and liability conditions specified in the general sales and delivery conditions of BOMAG GmbH.

We wish you successful work with your BOMAG machine.

1.2 Machine type plate and engine type plate

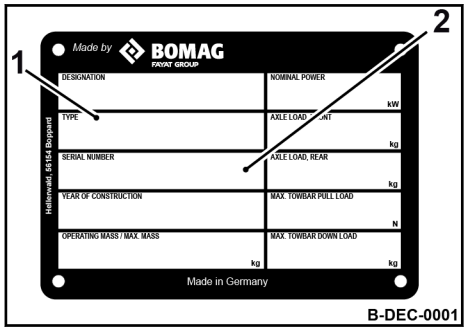

Fig. 1: Machine type plate (example)

Please enter here:	
Machine type (1):	
Serial number (2):	

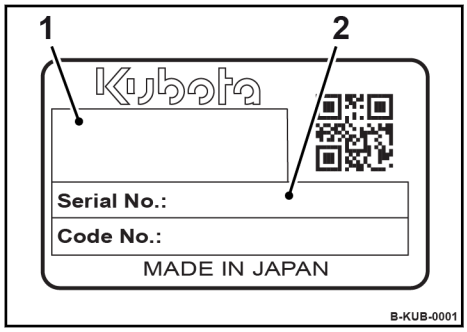

Fig. 2: Engine type plate (example)

Please enter here:	
Engine type (Fig. 1)	
Engine number (2):	

2 Technical data

Dimensions

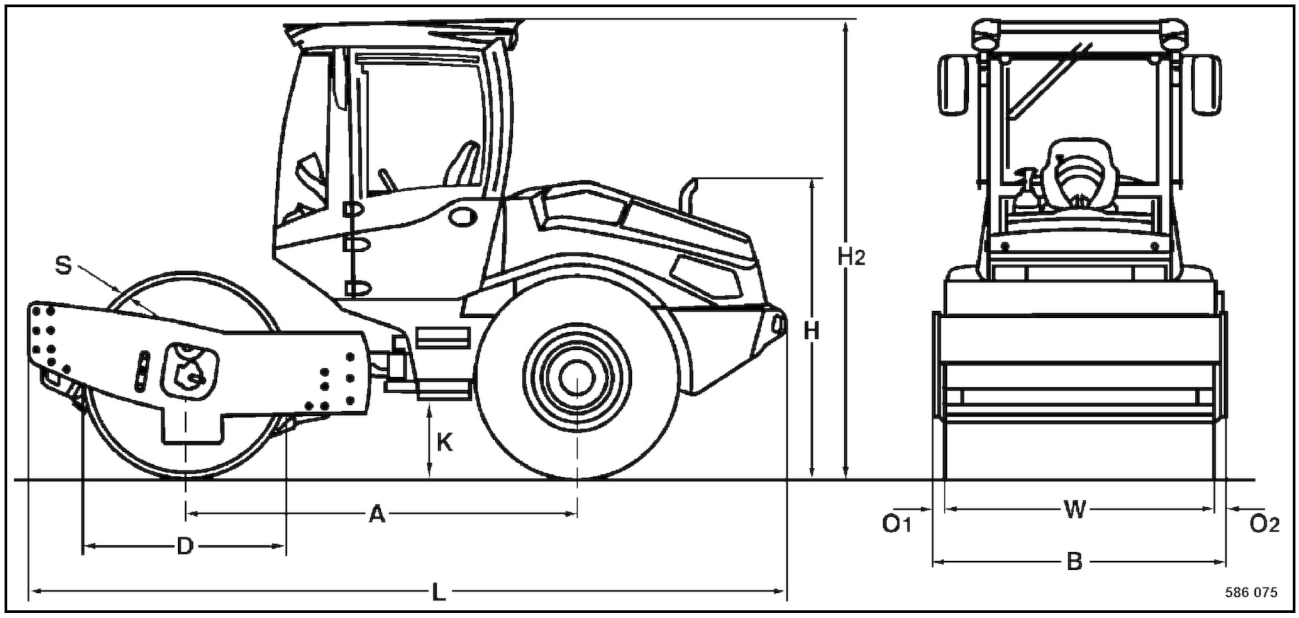

Fig. 3

A	B	D	H	H_2	K	L	$O_{1/2}$	S	W
2350	1820	1228	1655	2800	380	4540	65	20	1686
(93)	(72)	(48)	(65)	(110)	(14.9)	(179)	(2.6)	(0.8)	(66)
Dimensions in millimetres (Dimensions in inch)									

Length with tamper transport bracket *(optional equipment)*	4918 (194)	mm (in)

Weights		
Max. operating weight	8200 (18078)	kg (lbs)
Operating weight with ROPS-cabin (CECE)	6700 (14771)	kg (lbs)
Axle load, drum (CECE)	4050 (8929)	kg (lbs)

Weights		
Axle load, wheels (CECE)	2650 (5842)	kg (lbs)
Static linear load	24.0 (134)	kg/cm (pli)

Travel characteristics		
Travel speed	0 - 10 (0 - 6.2)	km/h (mph)
Max. gradeability without/with vibration (soil and weather dependent)	61/58	%

Drive		
Engine manufacturer	Kubota	
Type	V 3307 DI-T	
Cooling	Water	
Number of cylinders	4	
Rated power ISO 14396	55.4	kW
Rated power SAE J 1995	75	hp
Rated speed	2400	min^{-1}

Electric system		
Voltage	12	V

Tyres		
Tyre size	14.9-24/8PR	
Air pressure, nominal value	1.3 (19)	bar (psi)
Air pressure, range	1.1 – 1.5 (16 - 22)	bar (psi)

Brakes		
Service brake	hydrostatic	
Parking brake	hydro-mechanical	

Steering		
Type of steering	Oscill.-articul.	
Steering angle	+/- 35	°
Oscillation angle	+/- 12	°
Inner track radius	2975 (117)	mm (in)

Exciter system		
Drive system	hydrostatic	
Frequency (1/2)	29/32 (1740/1920)	Hz (vpm)
Amplitude (1/2)	1.90/0.80 (0,075/0,031)	mm (in)
Centrifugal force (1/2)	112/74 (25179/16636)	kN (lbf)

Filling capacities		
Fuel (diesel)	110	l
	(29)	(gal us)

2.1 Noise and vibration data

The following noise and vibration data were determined in accordance with the following guidelines under equipment specific conditions and by using harmonized standards:

- EU Machine Directive edition 2006/42/EU
- Noise Emission Directive 2000/14/EU, Noise Protection Directive 2003/10/EU
- Vibration Protection Directive 2002/44/EU

During operation these values may vary because of the prevailing operating conditions.

2.1.1 Noise data

Sound pressure level at the operator's stand

L_{pA} = 76 dB(A), determined acc. to ISO 11201 and EN 500.

Guaranteed sound power level

L_{WA} = 106 dB(A), determined acc. to ISO 3744 and EN 500

2.1.2 Vibration data

Vibration of the entire body (driver’s seat)

The weighted effective acceleration value determined according to ISO 2631 is ≤ 0.5 m/s^2.

Hand-arm vibration

The weighted effective acceleration value determined according to ISO 5349 is ≤ 2.5 m/s^2.

Technical data – Noise and vibration data

3 Concerning your safety

3.1 Basic prerequisites

3.1.1 General

This machine has been built in compliance with the latest technical standard and complies with the applicable regulations and technical rules.

However, dangers for persons and property may arise from this machine, if:

- it is used for purposes other than the ones it is intended for,
- it is operated by untrained personnel,
- it is changed or converted in an unprofessional way,
- the safety instructions are not observed.

Each person involved in the operation, maintenance and repair of the machine must therefore read and comply with these safety regulations. If necessary, the operating company must obtain the relevant signatures as confirmation.

Furthermore, the following obviously also applies:

- applicable accident prevention instructions,
- generally accepted safety and road traffic regulations,
- country/state specific safety regulations.

It is the duty of the operator to be acquainted with the safety regulations and to apply these accordingly. This also applies for local regulations and regulations concerning different types of handling activities. Should the recommendations in these instructions be different from the regulations valid in your country, you must comply with the safety regulations valid in your country.

3.1.2 Explanation of signal words used:



DANGER!
Danger to life if failing to comply!
Sections marked accordingly indicate an extremely dangerous situation that could lead to fatal or severe injuries, if this warning is disregarded.



WARNING!
Danger to life or danger of severe injuries if failing to comply!
Sections marked accordingly indicate a dangerous situation that could lead to fatal or severe injuries, if this warning is disregarded.



CAUTION!
Danger of injury if failing to comply!
Sections marked accordingly indicate a dangerous situation that could lead to fatal or severe injuries, if this warning is disregarded.



NOTICE!
Danger of material damage if failing to comply!
Sections marked accordingly indicate possible dangers for machines or components.

Sections marked accordingly indicate technical information or notes on using the machine or its components.

ENVIRONMENT!

Environmental damage if failing to comply!

Paragraphs marked accordingly indicate practices for safe and environment-friendly disposal of fuels and lubricants as well as replacement parts.

3.1.3 Personal protective equipment

Depending on the work to be carried out, personal protective equipment is required (to be provided by the operating company):

	Working clothes	Tight fitting working clothes with low tear resistance, tight sleeves and without any projecting parts protect against being caught by moving components.
	Safety shoes	To protect against heavy falling parts and slipping on slippery ground.
	Protective gloves	To protect the hands against excoriation, punctures or deep injuries, against irritating and caustic substances as well as against burns.
	Safety goggles	To protect the eyes against airborne particles and squirting fluids.

	Face protection	To protect the face against airborne particles and squirting fluids.
	Hard hat	To protect the head against falling parts and to protect against injuries.
	Hearing protection	To protect hearing against excessive noise.
	Respiratory protection	To protect respiratory tracts against substances or particles.

3.1.4 Intended use

This machine must only be used for:

- Compaction work in earth construction and road bases.
- Compaction of bituminous material, e.g. road surface layers,

Intended use also includes compliance with the specified operating, maintenance and repair measures.

3.1.5 Improper use

Dangers may arise with the machine if it is used other than for its intended purpose.

Any danger caused by improper use is the sole responsibility of the operating company or driver/operator; the manufacturer cannot be held liable.

Examples of improper use are:

- Work with vibration on hard concrete, cured bitumen layers or extremely frozen ground
- Driving on non-load-bearing subsoil or inadequate contact areas (danger of tilting)
- Using the machine for towing
- Using to pull down walls or demolish buildings

Transporting persons, except the machine driver, is prohibited.

Starting and operating the machine in explosive environments and in underground mining is prohibited.

3.1.6 Estimated service life of the machine

If the following general conditions are met, the service life of the machine is usually in the range of several thousand operating hours:

- Regular safety inspections by an expert / qualified person
- Performance of the prescribed maintenance work within the specified time
- Immediate performance of necessary repair work
- Exclusive use of original spare parts

3.2 Definition of responsible persons

3.2.1 Operating company

The operating company is the natural or juridical person who uses the machine or in who's name the machine is used.

The operating company must make sure that the machine is only used for the purpose it is intended for and in strict compliance with the safety regulations mentioned in these operating and maintenance instructions.

The operating company must determine and assess the danger in its company. It must then take appropriate action to ensure health and safety at work for its employees and point out any remaining dangers.

The operating company must determine whether there are special operational hazards such as a toxic atmosphere or limiting soil conditions. Such conditions require special, additional measures to remove or reduce the hazard.

The operating company must make sure that all users read and understand the information concerning safety.

The operating company is responsible for the planning and professional execution of regular safety inspections.

3.2.2 Expert / qualified person

An expert / qualified person is a person who, based on his/her professional education and experience, has profound knowledge in the field of construction equipment and the machine in question in particular.

This person is acquainted with the applicable governmental industrial safety regulations, accident prevention instructions, guidelines and generally acknowledged technical rules and regulations (standards, directives, technical rules of other member states of the European Union or other contractual states concerning the agreement about the European Economic Area) in as far as is necessary to be able to judge the safe condition of this machine.

3.2.3 Driver / operator

This machine must only be operated by trained, instructed persons entrusted by the operating company aged 18 or more.

Observe your local laws and regulations.

Rights, obligations and rules of conduct for driver or operator:

The driver or operator must:

- be instructed about his rights and obligations,
- wear protective equipment as appropriate for the application,
- have read and understood the operating instructions,
- have made himself familiar with the operation of the machine,
- be physically and psychologically able to drive and operate the machine.

Persons under the influence of alcohol, medication or drugs are not allowed to operate, service or repair the machine.

Maintenance and repair work requires specific knowledge and must therefore only be performed by trained specialists.

3.3 Fundamentals for safe operation

3.3.1 Remaining dangers, remaining risks

Despite careful work and compliance with standards and regulations it cannot be ruled out that further dangers may arise when working with and handling the machine.

Both the machine as well as all other system components comply with the currently valid safety regulations. Nevertheless, remaining risks cannot be ruled out completely, even when using the machine for the purpose it is intended for and following all information given in the operating instructions.

A remaining risk can also not be excluded beyond the actual danger zone of the machine. Persons remaining in this area must pay particular attention to the machine, so that they can react immediately in case of a possible malfunction, an incident or failure etc.

All persons remaining in the area of the machine must be informed about the dangers that arise from the operation of the machine.

3.3.2 Regular safety inspections

Have the machine inspected by an expert / qualified person as required for the conditions the machine is working under, but at least once every year.

3.3.3 Modifications and alterations to the machine

Unauthorized changes to the machine are prohibited for safety reasons.

Original parts and accessories have been specially designed for this machine.

We wish to make explicitly clear that we have not tested or approved any parts or accessories not supplied by us.

The installation and/or use of such products may have an adverse effect on the active and/or passive safety.

3.3.4 Damage, defects, misuse of safety devices

Machines which are not safe to operate or in traffic must be immediately taken out of service and shall not be used, until these deficiencies have been properly rectified.

Safety installations and switches must neither be removed nor must they be made ineffective.

3.3.5 Roll Over Protective Structure (ROPS)

On machines with cab the ROPS is an integral part of the cab.

The frame of the machine must not be warped, bent or cracked in the area of the ROPS fastening.

The ROPS must not show any rust, damage, hairline cracks or open fractures.

The real machine weight must never exceed the testing weight for the ROPS.

No accessories may be welded or bolted on and no additional holes must be drilled without the consent of the manufacturer, since this will impair the strength of the unit.

The ROPS must therefore also not be straightened or repaired if it is damaged.

A defect ROPS must generally be replaced with an original spare part in close coordination with the manufacturer.

3.4 Handling fuels and lubricants

3.4.1 Preliminary remarks

The operating company must ensure that all professional users have read and follow the corresponding safety data sheets for the individual fuels and lubricants.

Safety data sheets provide valuable information about the following characteristics:

- name of substance
- possible dangers
- composition / information on constituents
- first-aid measures
- fire fighting measures
- measures in case of accidental release
- handling and storage
- limitation and monitoring of exposure / personal protective equipment
- physical and chemical properties
- stability and reactivity
- toxicological data
- environmental data
- notes on waste disposal
- information on transport
- legislation
- other data

3.4.2 Safety regulations and environmental protection regulations for handling diesel fuel

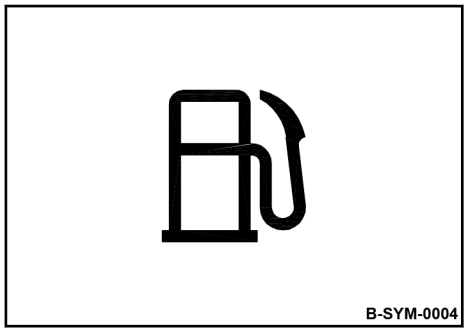

Fig. 4

WARNING!

Danger of burning by ignited diesel fuel!

– Do not allow diesel fuel to come into contact with hot components.
– Smoking and open fire is prohibited!
– Wear your personal protective equipment (protective gloves, protective clothing).

CAUTION!

Health hazard caused by contact with diesel fuel!

– Wear your personal protective equipment (protective gloves, protective clothing).
– Do not inhale any fuel fumes.
– Avoid contact.

CAUTION!

Danger of slipping on spilled diesel fuel!

– Immediately bind spilled diesel fuel with an oil-binding agent.

ENVIRONMENT!

Diesel fuel is an environmentally hazardous substance!

– Always keep diesel fuel in proper containers.

» Continued on the next page

– Immediately bind spilled diesel fuel with an oil-binding agent and dispose of properly.
– Dispose of diesel fuel and fuel filters according to regulations.

3.4.3 Safety regulations and environmental protection regulations for handling oil

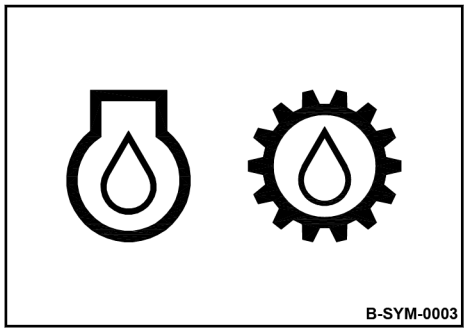

Fig. 5

WARNING!
Danger of burning by ignited oil!
– Do not allow oil to come into contact with hot components.
– Smoking and open fire is prohibited!
– Wear your personal protective equipment (protective gloves, protective clothing).

CAUTION!
Health hazard caused by contact with oil!
– Wear your personal protective equipment (protective gloves, protective clothing).
– Do not inhale any oil vapours.
– Avoid contact.

CAUTION!
Danger of slipping on spilled oil!
– Immediately bind spilled oil with an oil-binding agent.

ENVIRONMENT!
Oil is an environmentally hazardous substance!
– Always keep oil in proper containers.
– Immediately bind spilled oil with an oil-binding agent.
– Dispose of oil and oil filter according to regulations.

3.4.4 Safety regulations and environmental protection regulations for handling hydraulic oil

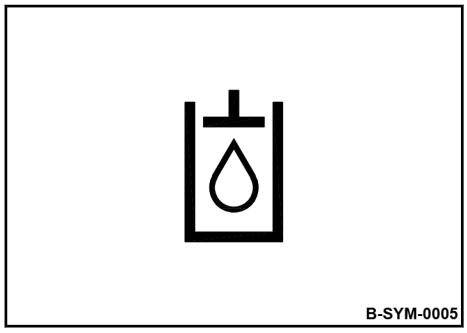

Fig. 6

WARNING!
Danger of injury caused by escaping pressure fluid!
- Always depressurize the hydraulic system before starting work in the hydraulic system.
- Wear your personal protective equipment (protective gloves, protective clothing, goggles).

Should pressure fluid penetrate the skin, immediate medical help is required.

WARNING!
Danger of burning by ignited hydraulic oil!
- Do not allow hydraulic oil to come into contact with hot components.
- Smoking and open fire is prohibited!
- Wear your personal protective equipment (protective gloves, protective clothing).

CAUTION!
Health hazard caused by contact with hydraulic oil!
- Wear your personal protective equipment (protective gloves, protective clothing).
- Do not inhale any oil vapours.
- Avoid contact.



CAUTION!

Danger of slipping on spilled oil!

– Immediately bind spilled oil with an oil-binding agent.



ENVIRONMENT!

Oil is an environmentally hazardous substance!

– Always keep oil in proper containers.
– Immediately bind spilled oil with an oil-binding agent.
– Dispose of oil and oil filter according to regulations.

3.4.5 Safety regulations and environmental protection regulations for handling coolants

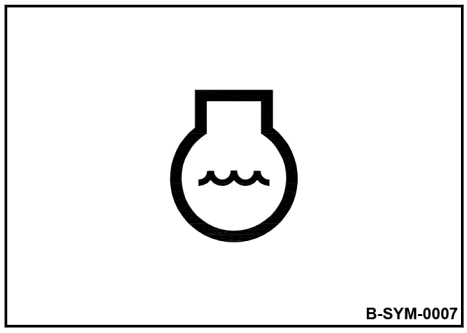

Fig. 7

WARNING!

Danger of scalding by hot fluid!

– Open the compensation tank only when the engine is cold.
– Wear your personal protective equipment (protective gloves, protective clothing, goggles).

CAUTION!

Health hazard caused by contact with coolant and coolant additives!

– Wear your personal protective equipment (protective gloves, protective clothing).
– Do not inhale any fumes.
– Avoid contact.

CAUTION!

Danger of slipping on spilled coolant!

– Immediately bind spilled coolant with an oil-binding agent.

ENVIRONMENT!

Coolant is an environmentally hazardous substance!

– Always keep coolant and coolant additives in proper containers.

» Continued on the next page

– Immediately bind spilled coolant with an oil-binding agent and dispose of it according to regulations.
– Dispose of coolant according to regulations.

3.4.6 Safety regulations and environmental protection regulations for handling battery acid

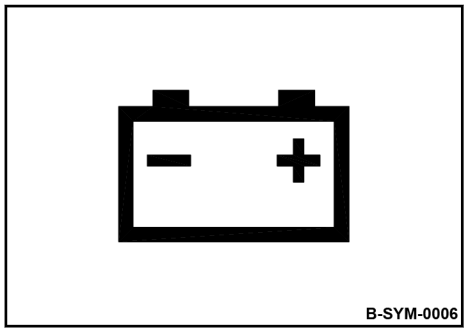

Fig. 8:

WARNING!
Danger of cauterization with acid!
- Wear your personal protective equipment (protective gloves, protective clothing, goggles).
- Do not allow clothes, skin or eyes to come into contact with acid.
- Rinse off spilled battery acid immediately with lots of water.

Rinse acid off clothes, skin or eyes immediately with lots of clean water.

Immediately call for medical advice in case of cauterization.

WARNING!
Danger of injury caused by exploding gas mixture!
- Remove the plugs before starting to recharge the battery.
- Ensure adequate ventilation.
- Smoking and open fire is prohibited!
- Do not lay any tools or other metal objects on the battery.
- Do not wear jewellery (watch, bracelets, etc.) when working on the battery.
- Wear your personal protective equipment (protective gloves, protective clothing, goggles).



ENVIRONMENT!

Battery acid is an environmentally hazardous substance!

– Dispose of battery and battery acid according to regulations.

3.5 Load/transport the machine

Use only stable loading ramps of sufficient load bearing capacity.

Loading ramps and transport vehicle must be free of grease, oil, snow and ice.

The ramp inclination must be less than the gradability of the machine.

Make sure that persons are not endangered by the machine tipping or sliding off. The instructing person must stand within the view of the operator, but outside the danger area.

Secure the machine with the articulation lock after driving it on the transport vehicle or before loading it with a crane.

Do not use damaged or in any other way impaired lashing points.

Always use appropriate lifting and lashing means on the lifting and lashing points.

Use lifting and lashing gear only in the prescribed direction of load application.

Lifting tackle must not be damaged by machine components.

Secure the machine on the transport vehicle against rolling, slipping and turning over.

Loads must only be attached and hoisted by an expert / capable person.

Use only lifting gear and lifting tackle with sufficient load bearing capacity for the weight to be loaded.

Fasten the lifting gear only at the specified lifting points.

Danger to the life of persons if they step or stand under a suspended load.

When lifting the machine avoid uncontrolled movements of the load. If necessary hold the load with guide ropes.

After the transport loosen the articulation lock again, as otherwise the machine wouild not be steerable.

3.6 Starting up the machine

3.6.1 Prior to commissioning

Only use machines which have been serviced at regular intervals.

Become acquainted with the equipment, the indicators and control elements, the working principle of the machine and the working area.

Use your personal protective equipment (hard hat, safety boots, if necessary also goggles and ear protection).

Make sure that the machine is equipped with the required lighting according to the requirements of the application.

Do not take any loose objects with you or fasten them to the machine.

Before mounting the machine check whether:

- persons or obstructions are beside or under the machine;
- the machine is free of oily and combustible materials;
- all access steps, grips and platforms are free of obstacles, grease, oils, fuel, dirt, snow and ice;
- all safety elements are in place;
- all maintenance flaps and doors are closed and locked.

Climb onto or off the machine only when the machine is standing. Use the existing access steps and grips.

When climbing on and off the machine use the three-point support method: Always keep two feet and one hand or one foot and two hands on the machine.

Never jump off the machine.

Before commissioning, carry out all required visual inspections and function tests.

If the tests reveal damage or other defects, the machine must not be operated until these have been rectified.

Do not operate the machine with defective indicators and control elements.

3.6.2 Starting the engine

The machine must only be started and operated from the driver's seat.

Before starting and moving the machine, make sure that there is nobody in the danger zone.

To start, set all control levers to "neutral position".

Do not use any starting aids like start pilot or ether.

The machine must not be operated with damaged, missing or non-functional safety installations.

After starting check all display instruments.

Do not inhale exhaust fumes, because they contain toxic substances, which could cause damage to health, unconsciousness or even death.

For operation in closed or partly closed rooms ensure adequate ventilation.

3.6.3 Starting the engine with jump leads

Connect positive with positive and negative with negative (ground cable) – always connect the ground strap last and disconnect it first! A wrong connection will cause severe damage in the electric system.

Do not start the engine by shorting the electric terminals on the starter motor, because the machine may start to drive immediately.

3.7 Driving the machine; working operation

3.7.1 Driving the machine

Always wear the seat belt when driving.

Only drive on load-bearing surfaces.

Do not drive on ice and snow.

If the machine has touched high-voltage power lines:

- Do not leave the driver’s stand
- Warn others from coming close to or touching the machine
- If possible, drive the machine out of the danger zone
- Have the power switched off.

Operate the machine only from the driver’s stand.

Keep the cabin doors closed.

Do not adjust the driver’s seat while driving.

Do not climb onto or off the machine while the machine is driving.

Do not use the machine to transport persons.

In case of unusual noises and development of smoke perform trouble shooting to determine the cause and have the fault corrected.

Match the speed to the working conditions.

Do not make extreme steering movements when driving at high speed: danger of tipping over!

Always give way to loaded transport vehicles.

Switch the lights on if visibility is poor.

Always keep a safe distance to excavation pit borders, embankments and edges.

Refrain from any work that could adversely affect the stability of the machine.

Always keep a sufficient distance when passing through subways, under bridges, tunnels, electric power lines, etc.

3.7.2 Driving up and down slopes

Do not drive on gradients or slopes exceeding the maximum gradeability of the machine ↳ *Chapter 2 'Technical data' on page 15*.

Drive extremely carefully on gradients and always directly up or down the slope.

Soil conditions and weather influences impair the gradeability of the machine.

Wet and loose soil considerably reduces traction of the machine on inclinations and slopes. Increased danger of accident!

3.7.3 Cross-slope

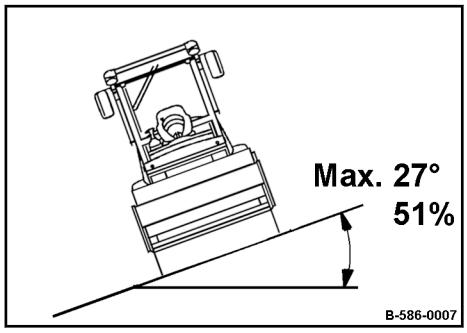

Fig. 9: Maximum cross-slope

The tipping angle was measured statically on level, hard ground with the machine stopped and without steering.

The max. permissible inclination of the machine may be limited by the max. permissible slanted position of the engine.

The specified angle must not be exceeded.

With loose soil, acceleration/deceleration, running vibration, steering or attached accessories the tipping angle may be considerably lower.

Driving across slopes should therefore be strictly avoided, because of the high risk of tipping over and the related risk of severe or even fatal accidents.

3.7.4 Working with vibration

When compacting with vibration you must always check the effect of the vibration on nearby buildings and underground supply lines (gas, water, sewage, electric power). If necessary stop compacting with vibration.

Do not activate the vibration on hard (frozen, concrete) ground. Components may get damaged.

3.7.5 Parking the machine

Park the machine on horizontal, level, firm ground.

Before leaving the machine:

- shift all control levers to “Neutral position”, “Off” or “0”,
- apply the parking brake,
- shut down the engine, pull off the ignition key,
- pull off the main battery switch,
- secure the machine against unauthorized use.

Do not jump off the machine, but use hand grips and access steps.

Mark machines, which could be in the way, with a clearly visible sign.

When parking on ascents or descents use appropriate means to secure the machine against rolling.

3.8 Refuelling

Do not inhale any fuel fumes.

Refuel only with the engine shut down.

Do not refuel in closed rooms.

No open fire, do not smoke.

Static charges may be generated in the fuel as it passes through the filling system. The discharge of these charges in the presence of combustible vapours can cause fire or an explosion.

Ultra-low sulphur diesel fuel poses a higher risk of combustion caused by the static charging than diesel fuel with a higher sulphur content.

You should therefore always make sure that the filling system is properly grounded and that there is equipotential bonding to the machine. If necessary use a connecting cable between filling system and vehicle ground.

Monitor the entire refuelling process.

Do not spill any fuel. Collect leaking fuel, do not let it seep into the ground.

Wipe off spilled fuel. Keep dirt and water away from the fuel.

A leaking fuel tank can cause an explosion. Ensure tight fit of the tank cover; if necessary replace immediately.

3.9 Emergency procedures

3.9.1 Actuating the emergency stop switch

In events of emergency and in case of danger actuate the emergency stop switch immediately.

The machine is braked immediately, the engine is shut down.

Restart the machine only after the danger that caused the actuation of the emergency stop switch has been eliminated.

In case of frequent use the wear on the multi-discs brakes will be very high, you should therefore never use the emergency stop switch as a service brake.

3.9.2 Disconnecting the battery

In events of emergency, e.g. in case of a cable fire, disconnect the battery from the vehicle network.

Pull out the main battery switch or lift off the battery pole to do so.

3.9.3 Towing the machine

Tow the machine only in a case of emergency or to avoid an accident.

Before releasing the parking brake apply suitable measures to secure the machine against unintended rolling.

Use a tractor vehicle with sufficient traction and braking power for the unbraked towed load.

If no tow bar is used, towing is only permitted uphill.

Before starting towing operations make sure that the fastening means are able to withstand the load and are fastened at the points provided for this purpose.

Before removing the towing facility apply appropriate measures to secure the machine against unintended rolling.

3.10 Maintenance work

3.10.1 Preliminary remarks

Always carry out the prescribed maintenance work and maintenance measures on time in order to maintain the safety, operational readiness and long service life of the machine.

The machine must only be serviced by qualified personnel authorised by the operating company.

3.10.2 Working on hydraulic lines

Before the hydraulic system can be depressurized, machine parts with hydraulic movement must be safely set down or secured to prevent them from falling.

Relieve hydraulic pressures before working on hydraulic lines. Hydraulic oil escaping under pressure can penetrate the skin and cause severe injury. Immediately call for medical assistance if injured by hydraulic oil.

Do not step in front of or behind the machine when performing adjustment work in the hydraulic system.

Do not change the setting of pressure relief valves.

Drain the hydraulic oil at operating temperature – danger of scalding!

Any hydraulic oil must be collected and disposed of in an environmentally friendly way.

Always collect and dispose of hydraulic oils separately.

Do not start the engine after draining off the hydraulic oil. Once all work is completed (with the system still depressurized!) check all connections and fittings for leaks.

Hydraulic hoses must be visually inspected at regular intervals.

Do not mix up hoses by mistake.

Only genuine replacement hydraulic hoses ensure that the correct hose type (pressure range) is used at the right location.

3.10.3 Working on the engine

Do not work on the fuel system while the engine is running - danger to life due to high pressures!

Wait until the engine has stopped, then wait approx. another 15 minutes.

Keep out of the danger zone during the initial test run.

In case of leaks return to the workshop immediately.

Drain the engine oil at operating temperature – danger of scalding!

Wipe off spilled oil, collect leaking oil and dispose of it in an environmentally friendly way.

Store used filters and other oil contaminated materials in a separate, specially marked container and dispose of them in an environmentally friendly way.

The settings for idle speed and highest speed must not be changed, since this would affect the exhaust gas values and cause damage to engine and power train.

Engine and exhaust system work at high temperatures. Keep combustible materials away and do not touch any hot surfaces.

Check and change coolant only when the engine is cold. Collect coolant and dispose of it in an environmentally friendly way.

3.10.4 Maintenance work on electric components and battery

Before starting to work on electric parts of the machine disconnect the battery and cover it with insulating material.

Do not use fuses with higher ampere ratings and do not bridge fuses.

When working on the battery, smoking or open fire is prohibited!

Do not lay any tools or other metal objects on the battery.

Do not wear jewellery (watch, bracelets, etc.) when working on the battery.

The connection cables of the battery must not touch or rub against machine parts.

3.10.5 Working on the air conditioning

Faults on the air conditioning should only be remedied by authorized service personnel.

Do not perform welding work in the vicinity of the air conditioning. Danger of explosion!

Do not release refrigerant into the atmosphere, but dispose of it in line with environmental regulations.

3.10.6 Working on wheels and tyres

Explosion-like bursting of tyres or parts of tyres and rims can cause most severe or even fatal injuries.

Do not drive with damaged wheels or tyres.

Install the tyres only if you are sufficiently experienced and with the right tools at hand. If necessary have the tyres assembled in a qualified workshop.

Always ensure the correct tyre pressure and do not exceed the specified maximum pressure.

When checking the tyre pressure stand in the extended path of the tyre track. Use an at least 6 meter air hose, so that you can keep a safe distance to the tyre.

Always consider the heavy weight of a wheel during disassembly and assembly. Use a crane or forklift truck equipped with suitable claws or a belt-type hoisting device.

3.10.7 Cleaning work

Do not perform cleaning work while the motor is running.

Allow the engine to cool down before starting cleaning work on engine and exhaust system.

Never use gasoline or other easily inflammable substances for cleaning.

When cleaning with a high pressure cleaner, do not subject electrical parts and insulation material to the direct jet of water, or cover them beforehand.

Do not guide the water jet into the exhaust pipe and into the air filter.

3.10.8 Measures for longer shut-down periods

If the machine is taken out of operation for a longer period of time, various conditions must be met and maintenance work must be carried out both before and after shut-down ↳ *Chapter 8.12.8 ‘Measures prior to extended shut-down period’ on page 224*.

It is not necessary to define a maximum storage period if these measures have been performed.

3.10.9 After maintenance work

Reassemble all guards and protective devices.

Close all maintenance flaps and maintenance doors again.

3.11 Repair

Identify a defective machine with a warning sign.

Only operate the machine after it has been repaired.

Repairs must only be performed by an expert/ qualified person.

When replacing safety relevant components, only original spare parts must be used.

3.12 Signage

Keep stickers and signage in good and legible condition and comply with their meaning.

Replace damaged and illegible stickers or signage immediately.

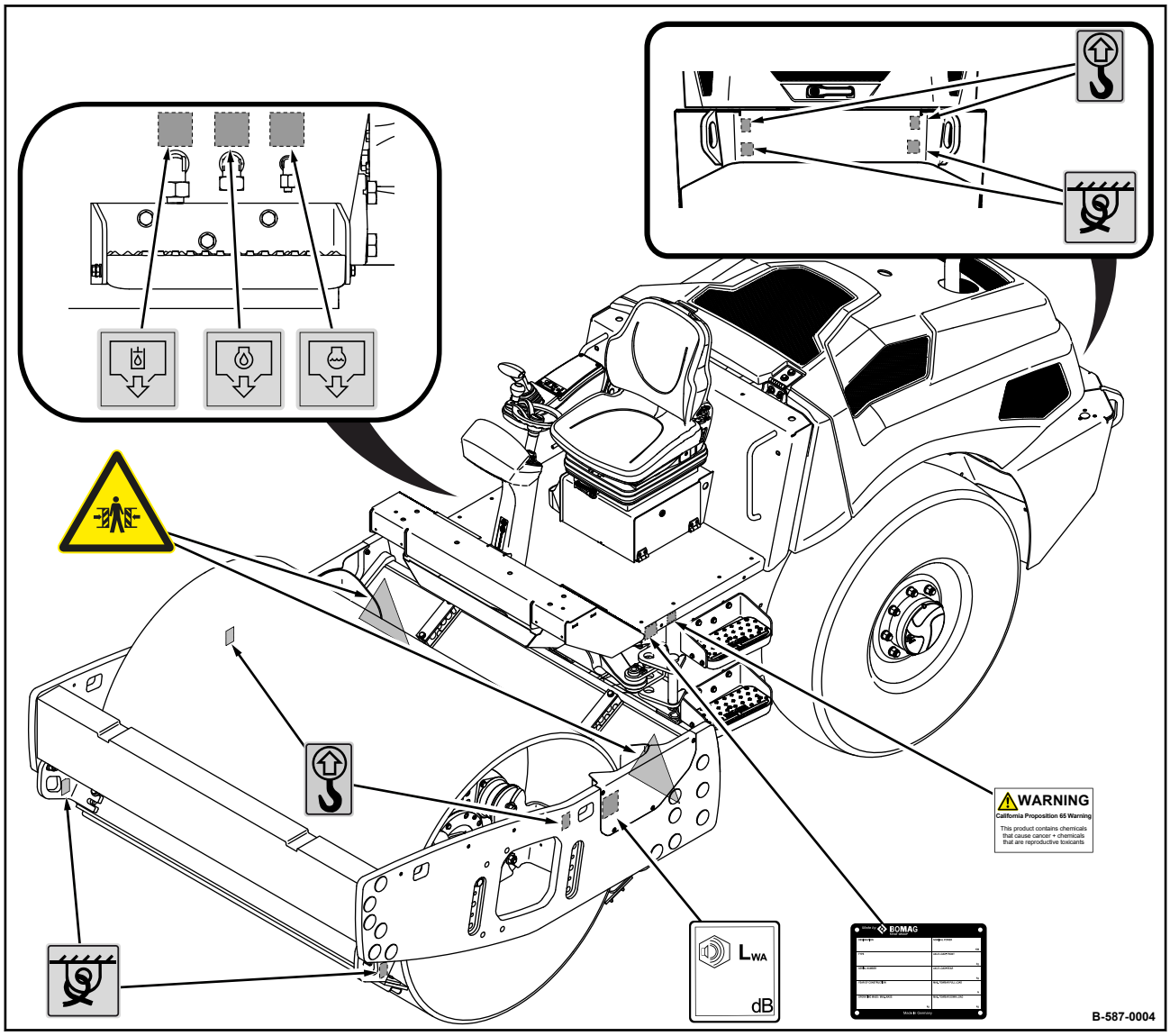

Fig. 10

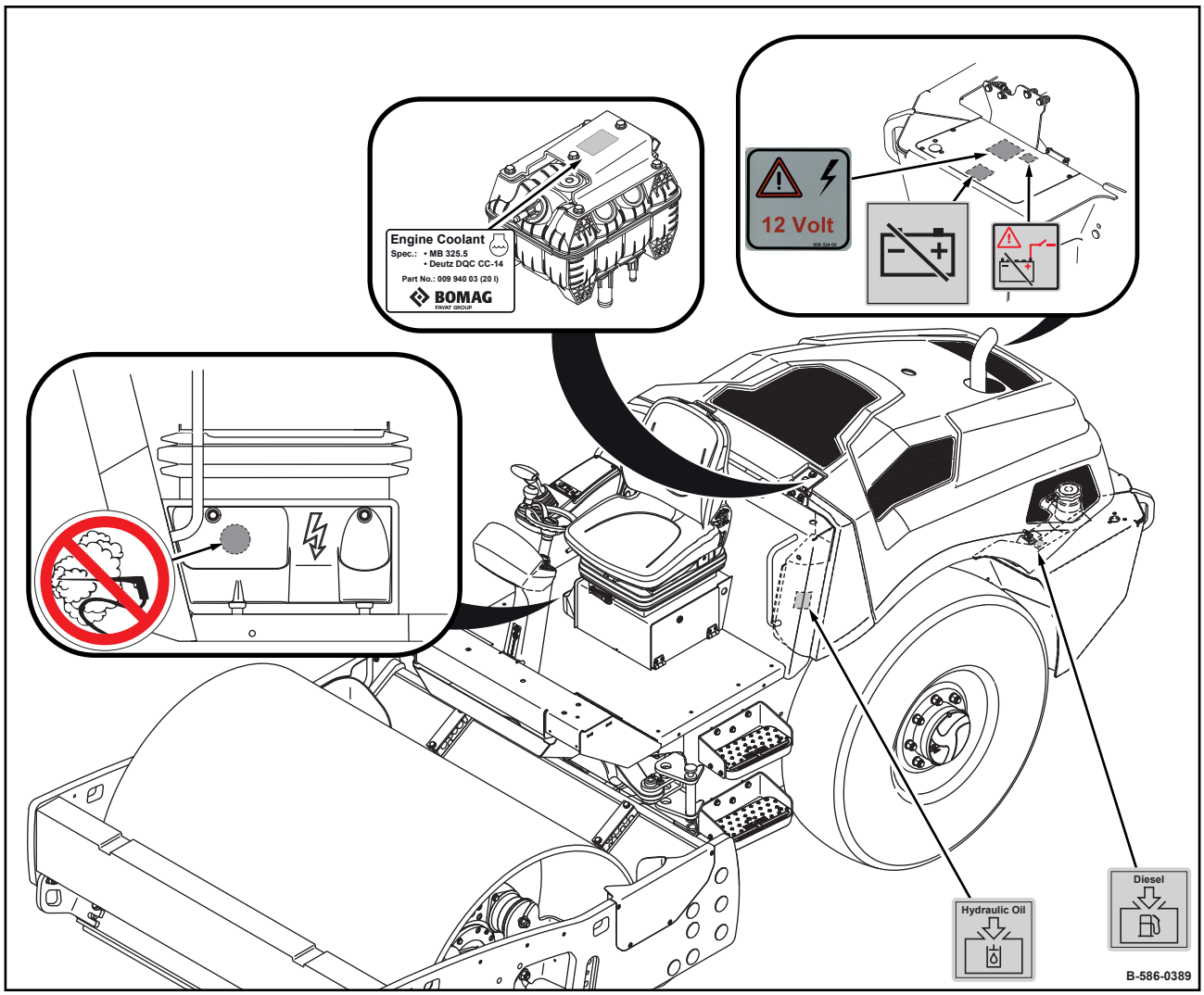
Engine Coolant
Spec.: • MB 325.5
• Deutz DQC CC-14
Part No.: 009 940 03 (20 l)
BOMAG
12 Volt
Hydraulic Oil
Diesel
B-586-0389

Fig. 11

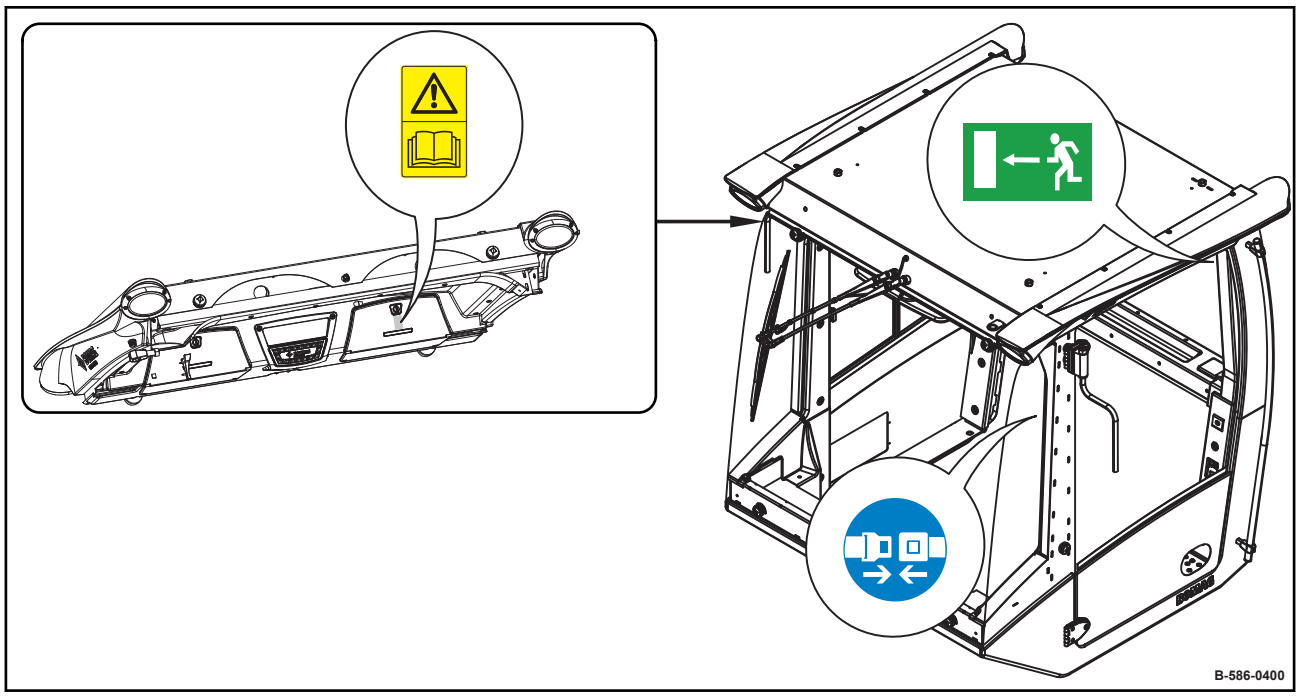

Fig. 12



Warning sticker - Danger of crushing

Fig. 13

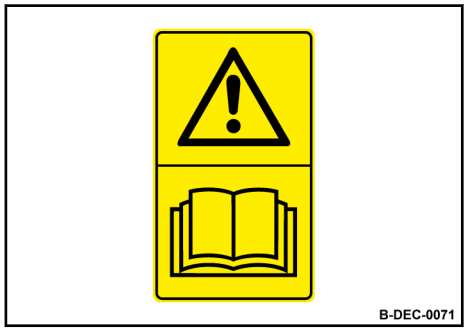

Warning sticker - Follow operating instructions

Fig. 14



Warning sticker – California Proposition 65

Fig. 15



Prohibition sticker - High pressure cleaning

Fig. 16

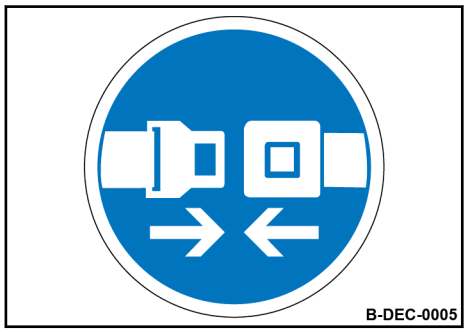

Instruction sticker - Always wear your seat belt

Fig. 17

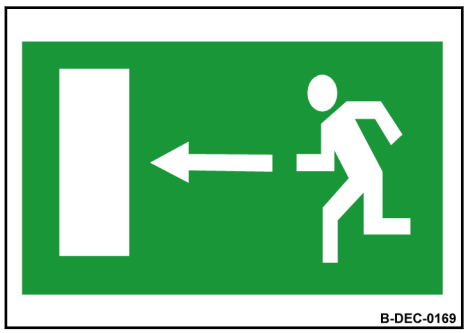

Information sticker - Emergency exit

Fig. 18

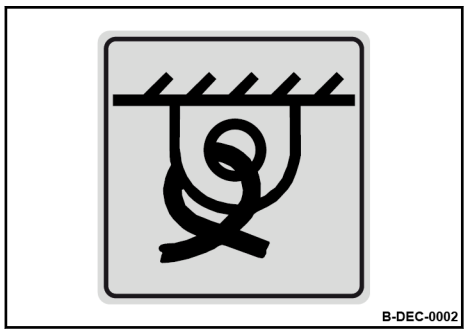

Information sticker - Lashing point

Fig. 19

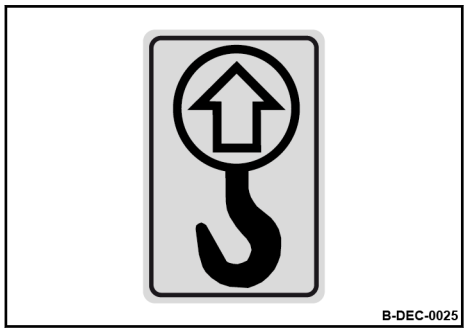

Information sticker - Lifting point

Fig. 20

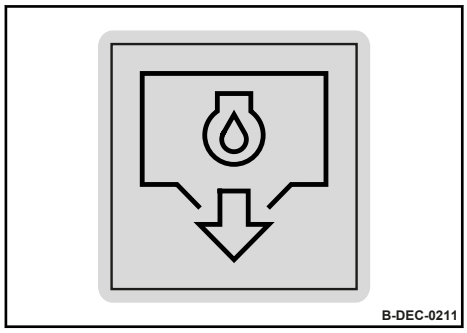

Information sticker - Engine oil drain

Fig. 21

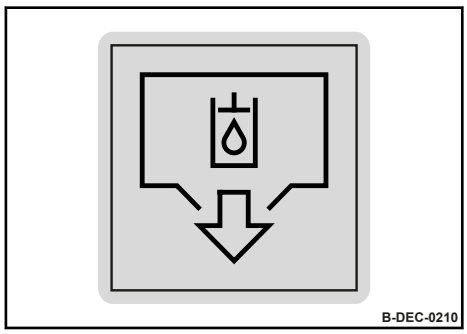

Information sticker - Hydraulic oil drain

Fig. 22

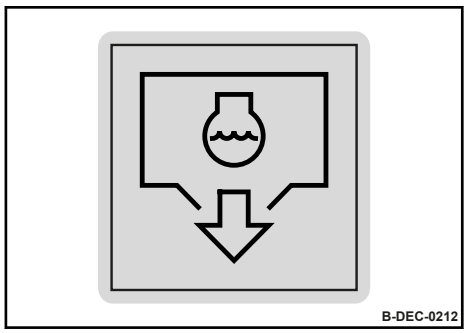

Information sticker - Coolant drain

Fig. 23

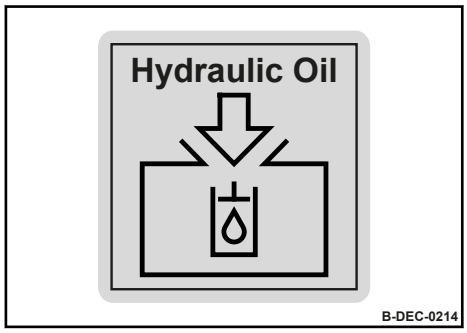

Information sticker - Filler opening for hydraulic oil

Fig. 24

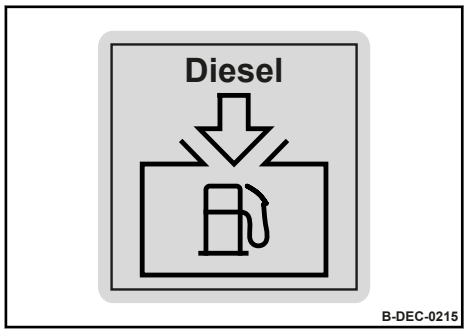

Information sticker - Filler opening for diesel

Fig. 25

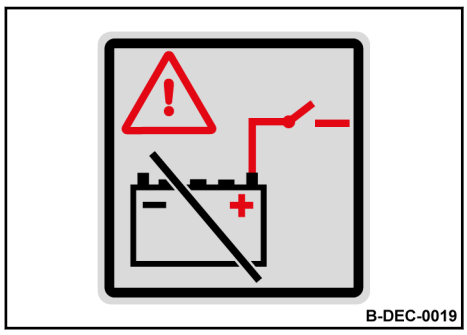

Information sticker - Main battery switch plus side

Fig. 26

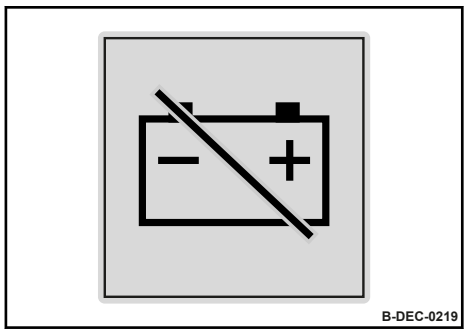

Information sticker - Disconnecting the battery

Fig. 27

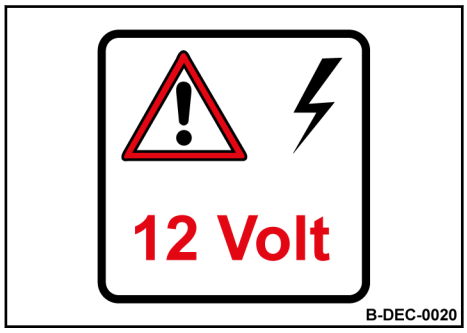

Information sticker - Vehicle voltage 12 V

Fig. 28

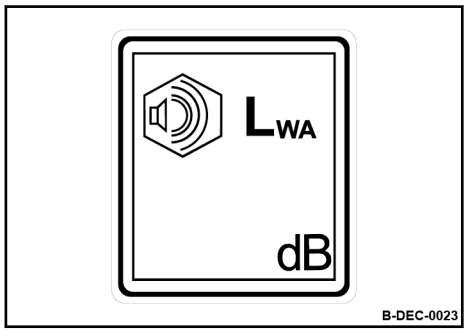

Information sticker - Guaranteed sound capacity level

Fig. 29

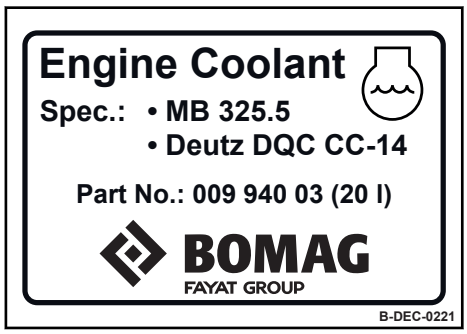

Information sticker - Coolant

Fig. 30

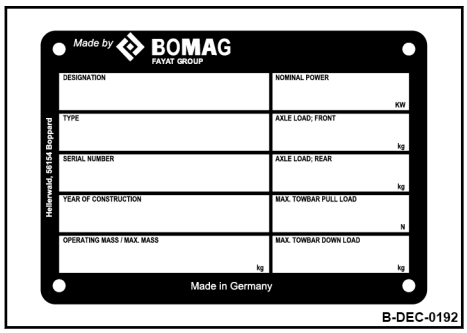

Machine type plate (example)

Fig. 31

3.13 Danger zones

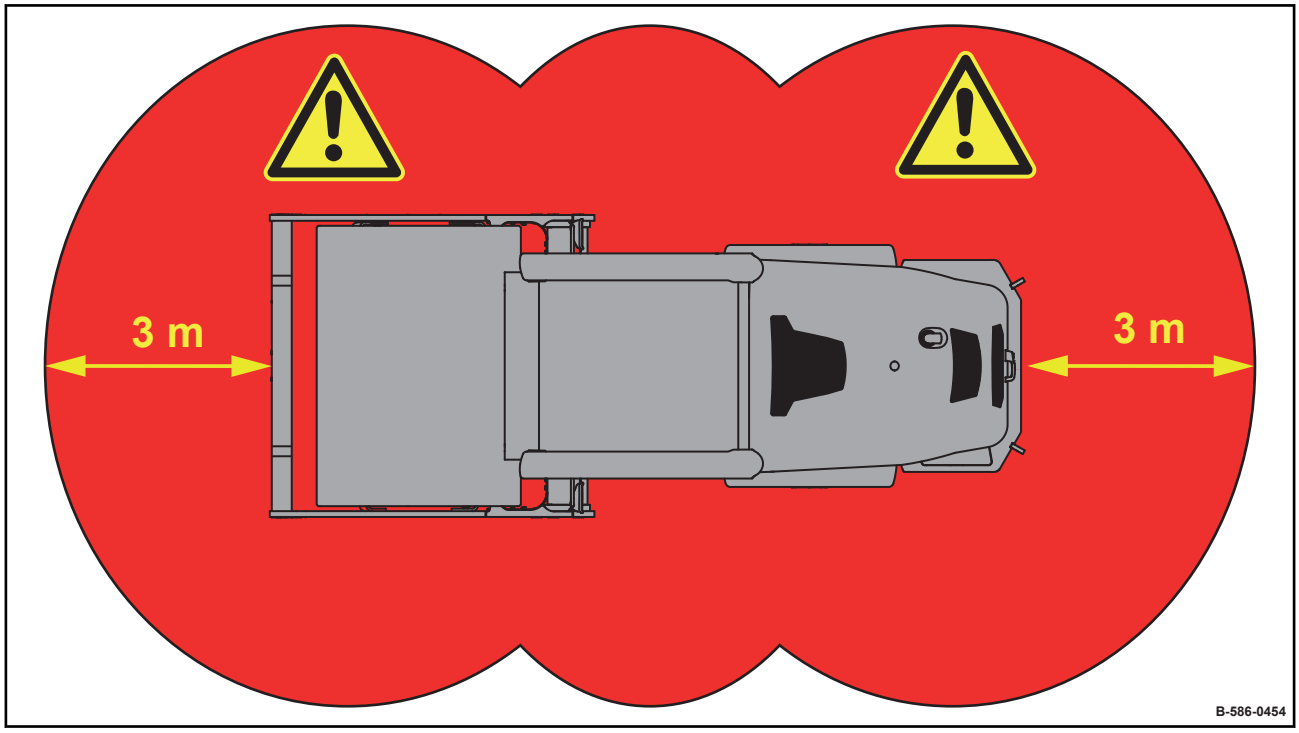

Fig. 32

The area around the machine is a danger zone.

Before starting the machine and during operation, the driver / operator must ensure that nobody is in the danger zone.

Give warning signals, if necessary. Stop work immediately if persons are in the danger zone.

3.14 Safety Components

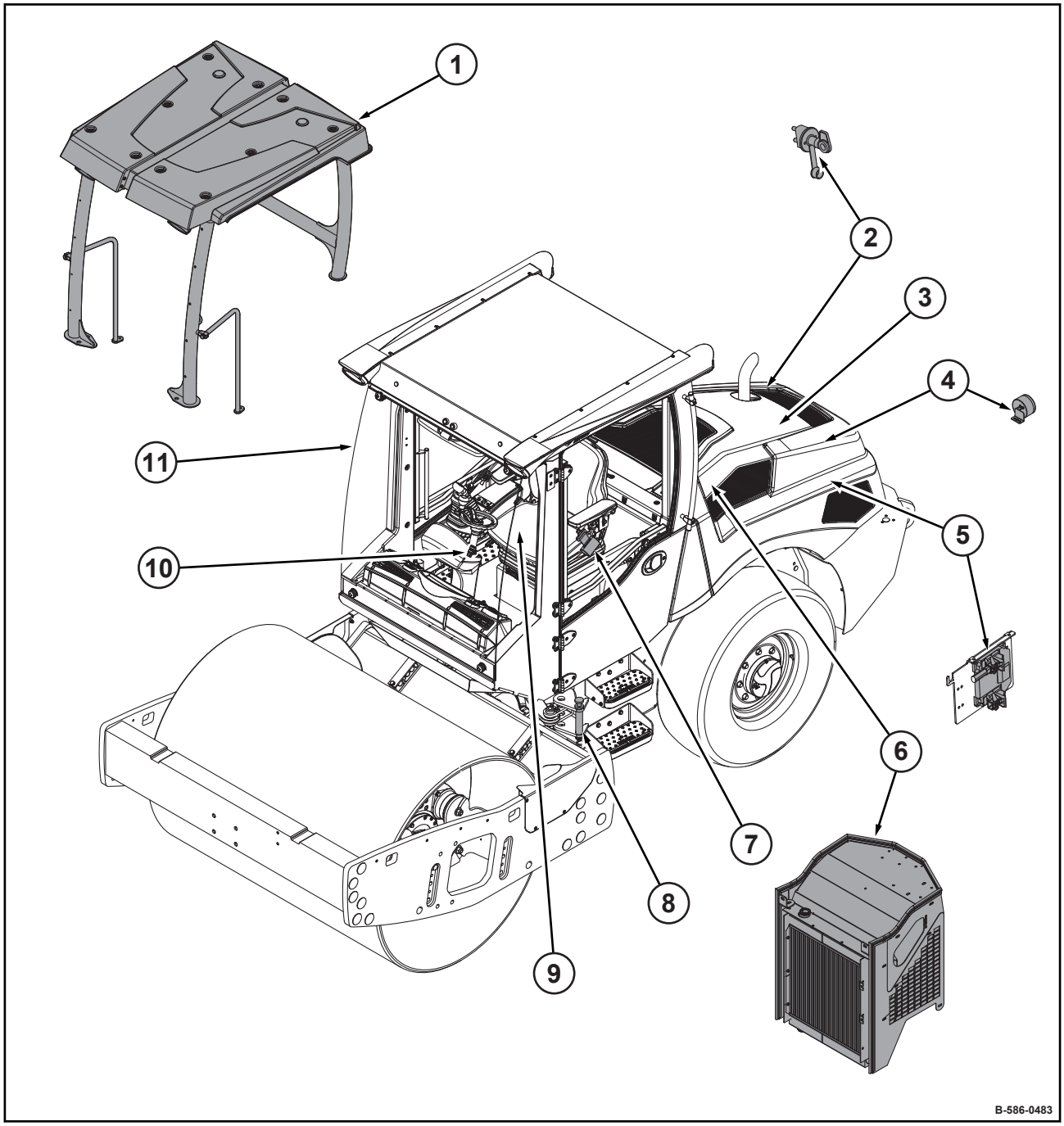

Fig. 33

1 ROPS/FOPS *(optional equipment)*
2 Main battery switch
3 Engine hood
4 Backup alarm system *(optional equipment)*
5 Control system

6 Fan protection
7 Safety belt
8 Articulation lock
9 Operator detection system
10 Emergency stop switch
11 ROPS cabin *(optional equipment)*

4 Indicators and control elements

4.1 Driver’s stand

4.1.1 Instrument cluster

Overview

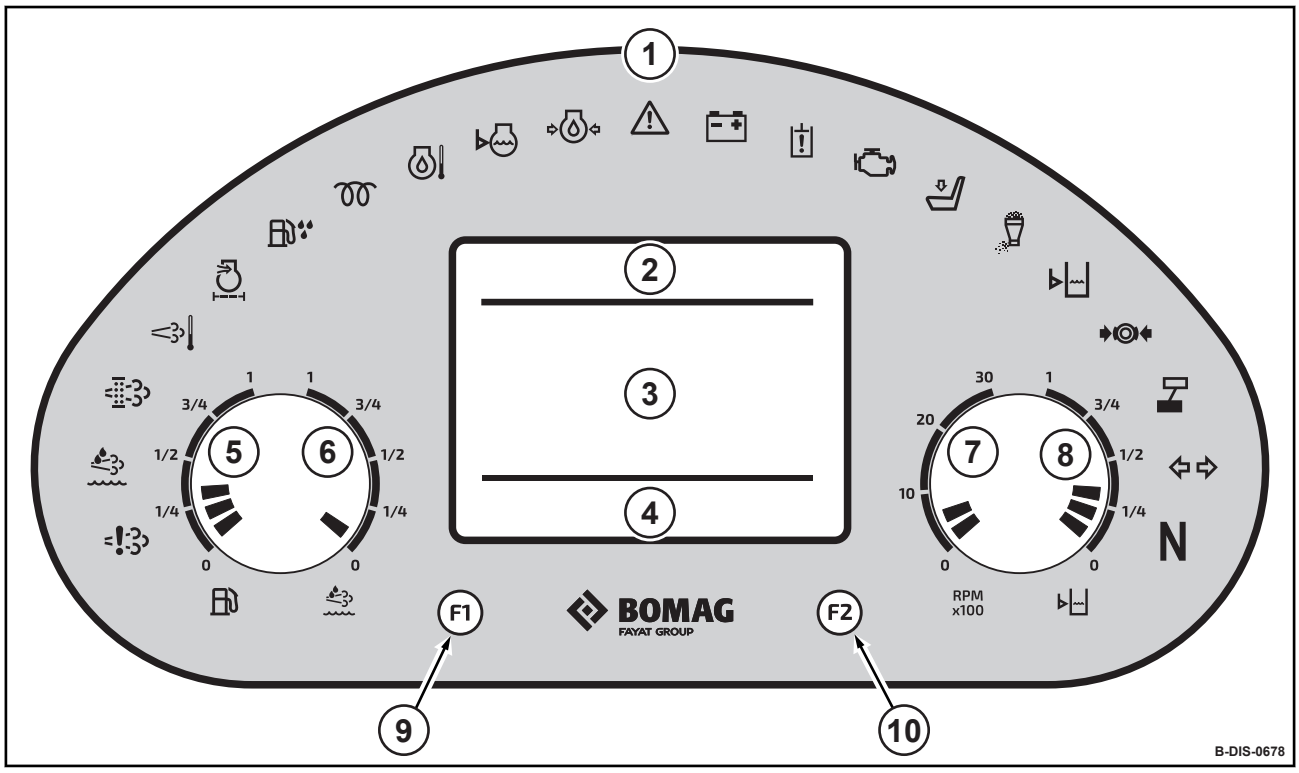

Fig. 34

1 Control and warning lights
2 INFO 3 display field
3 INFO 2 display field
4 INFO 1 display field
5 Fuel level gauge
6 Not assigned
7 Engine speedometer
8 Not assigned
9 Not assigned
10 Not assigned

Control and warning lights

	Designation	Note
	Exhaust gas after-treatment system warning light	Not assigned
	AdBlue®/DEF warning light	Not assigned
	Regeneration warning light	Not assigned
	Exhaust gas temperature warning light	Not assigned
	Air filter warning light	Lights up if the air filter is blocked. Clean or replace the air filter.
	Water in fuel warning light	Lights up when there is excessive water content in the fuel pre-filter. Warning buzzer sounds. Clean the water separator.
	Pre-heating control light	Lights up during pre-heating.
	Warning light for engine oil temperature	Not assigned
	Coolant level warning light	Lights up if the coolant level is too low. The engine is shut down after a short while. Check coolant level and check cooling system for leaks; repair if necessary.
	Engine oil pressure warning light	Lights up if the engine oil pressure is too low. The engine is shut down after a short while. Check the engine oil level; if necessary, repair the engine.

Indicators and control elements – Driver’s stand

	Designation	Note
	Central warning light	Flashes in case of system faults, warnings and for information purposes.
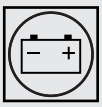	Charge control light	Lights up if the battery is not being charged. Check the V-belt drive; if necessary repair the generator.
	Warning light for hydraulic system	Lights up if the hydraulic oil filter is blocked. Warning buzzer sounds. The engine is shut down after approx. 2 minutes. Check the hydraulic system and replace the hydraulic oil filter.
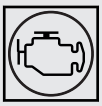	Engine control light	Lights up in case of a fault in the engine control unit. Take note of the fault codes and inform our Customer Service Department.
	Driver’s seat warning light	Lights up when the driver’s seat is not occupied. If the machine is travelling, the warning buzzer will sound and the machine is decelerated after 3 seconds. To continue driving sit in the driver's seat and shift the travel lever again to the required travel direction through the parking brake position.
	Precision spreader control light	Not assigned
	Water supply warning light	Not assigned
	Parking brake warning light	Lights up when the parking brake is applied.
	Crabwalk control light	Not assigned
	Indicator control light	

	Designation	Note
	Neutral position indicator	Not assigned

INFO 1 display field

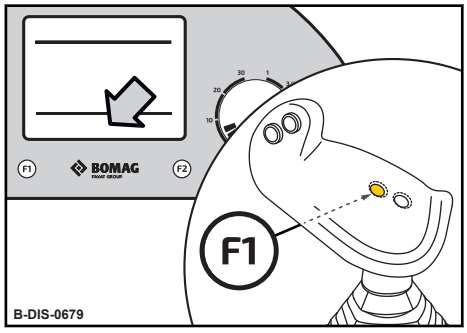

Fig. 35

Each actuation of the button *[F1]* on the travel lever switches between:

- Operating hours
- Coolant temperature
- Gradient
- Battery voltage
- Vibration frequency *(optional equipment)*

INFO 2 display field

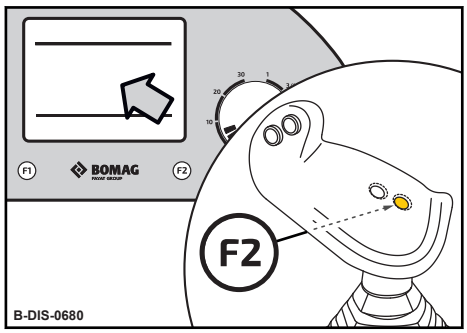

Fig. 36

Each actuation of the *[F2]* key on the travel lever switches between:

- Travel speed
- ECONOMIZER *(optional equipment)*
- E_{VIB} value *(optional equipment)*
- Travel speed and E_{VIB} value *(optional equipment)*
- Fault code display
- Overview of operating values

INFO 2 display field	Description
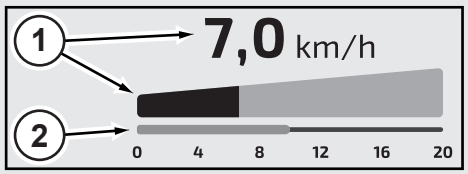	(1) Travel speed (2) Pre-selected speed limitation (depending on the position of the rotary switch for travel ranges)
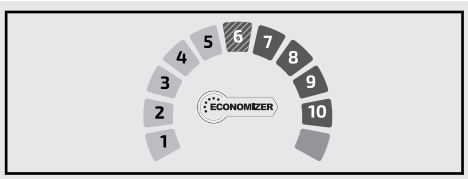	Compaction status ↬ *Chapter 6.6 'ECONOMIZER' on page 122*

INFO 2 display field	Description
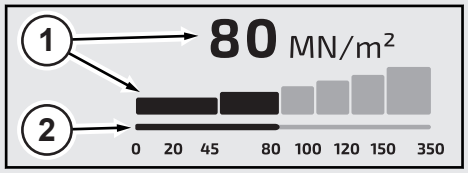	(1) E_{VIB} value (2) Pre/selected E_{VIB} value (only for machines with Variocontrol)
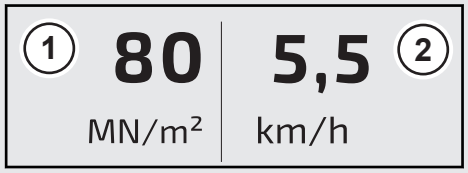	(1) E_{VIB} value (2) Travel speed
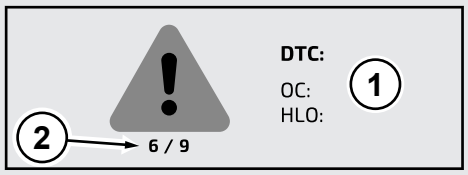	(1) ■ DTC: Fault code ■ OC: Frequency of fault ■ HLO: Operating hour when fault last occurred (2) Fault code index/total of incoming fault codes
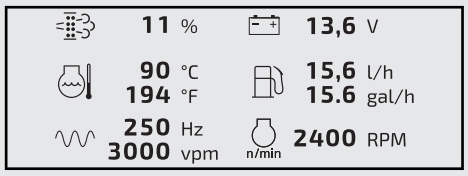	■ Diesel particulate filter soot load (Only on machines with exhaust gas after-treatment system) ■ Coolant temperature ■ Vibration frequency (Only on machines with corresponding measuring technology *(optional equipment))* ■ Battery voltage ■ Fuel consumption ■ Engine speed

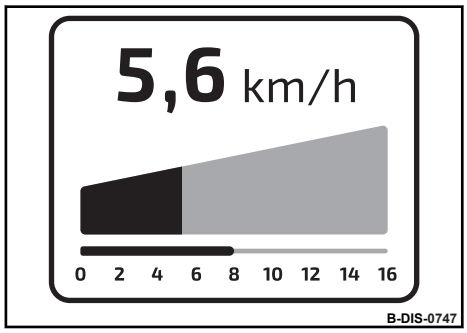

After 5 seconds, the view of the INFO 2 display field is automatically switched over to full screen mode.

Fig. 37

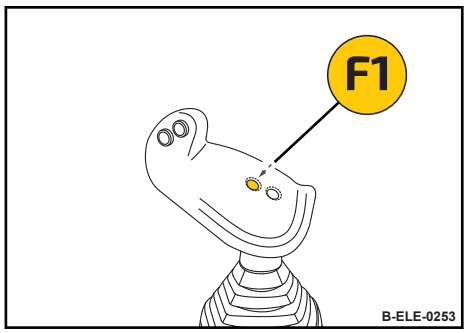

Fig. 38

The view can be changed with the *[F1]* key on the travel lever:

Press briefly.	Return to the view with three display fields. After 5 seconds, the view switches back to full screen mode again.
Press long.	Returns to the view with three display fields permanently.
Press long again.	Permanent view appears in full screen mode after 5 seconds.

INFO 3 display field

	Designation	Note
	Immobilizer control light	Lights up when the electronic immobilizer is active.
	ECOSTOP control light	Lights up after the engine has been shut down by the ECOSTOP function.
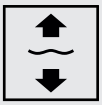	Floating position control light	Lights up, when the dozer blade is in floating position.
	Control light for arm console	Lights up when the arm console is raised during travel.

4.1.2 Operating console

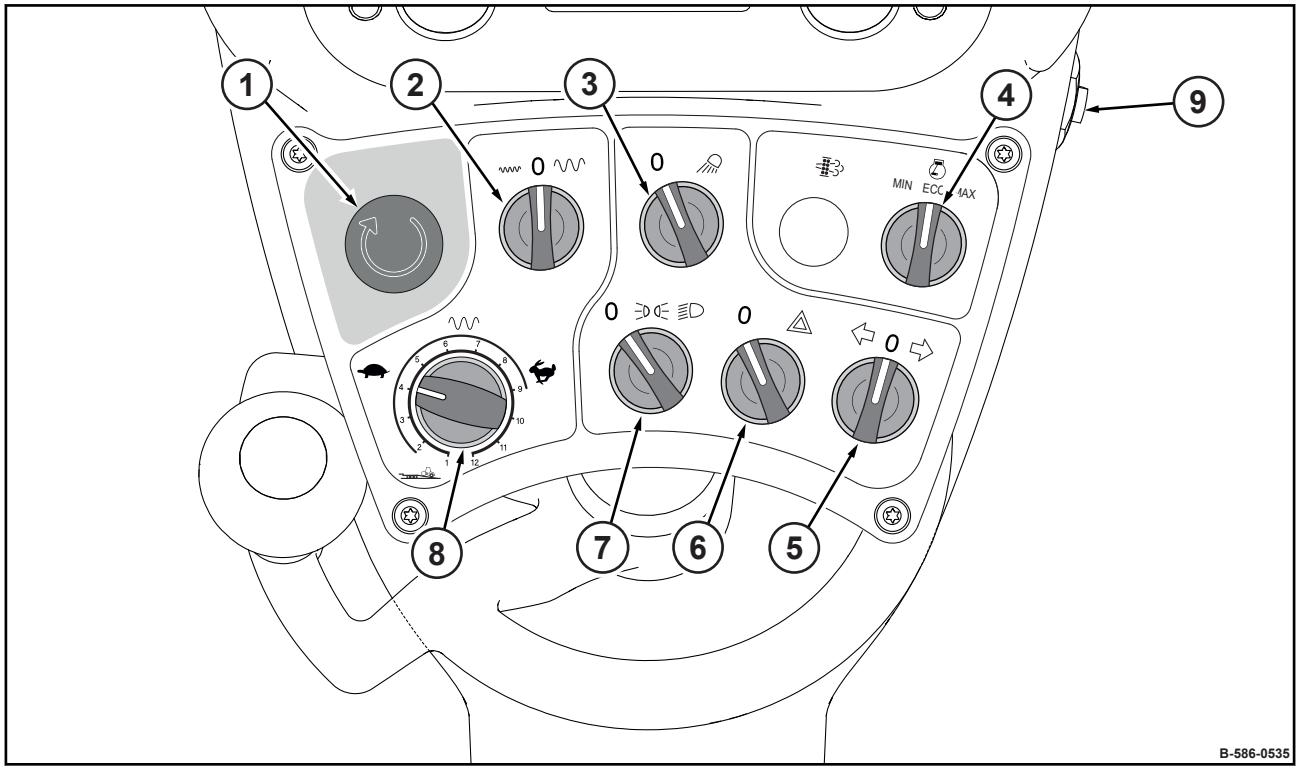

Fig. 39

1 Emergency stop switch
2 Rotary switch for amplitude pre-selection
3 Rotary switch for working lights *(optional equipment)*
4 Rotary switch for engine speed
5 Rotary switch for direction indicators *(optional equipment)*
6 Rotary switch for hazard light system *(optional equipment)*
7 Rotary switch for lighting *(optional equipment)*
8 Rotary switch for travel speed ranges
9 Starter switch

4.1.2.1 Emergency stop switch

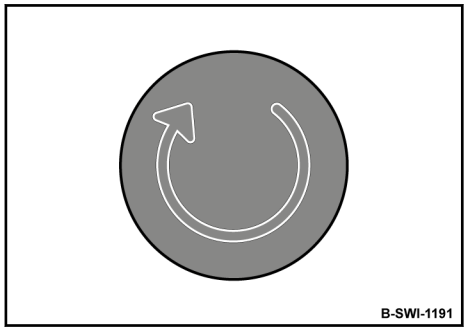

Fig. 40

press	In events of emergency and in case of danger actuate the emergency stop switch immediately by pressing it fully down. It automatically locks in end position. The machine will be braked immediately. The engine is shut down.
switch off/ unlock	Turn the Emergency Stop switch clockwise and let it go.

NOTICE!

In case of frequent use the wear on the multi-discs brakes will be very high.

– Do not use the emergency stop switch as service brake!

4.1.2.2 Rotary switch for amplitude pre-selection

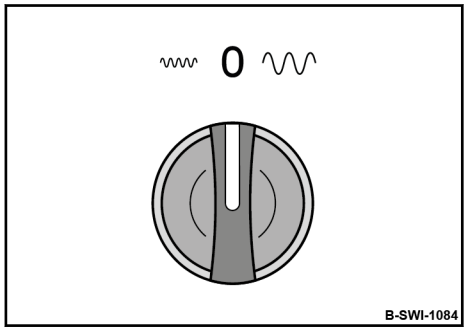

Fig. 41

Position “Left”	low amplitude, high frequency
Position “Middle”	Vibration off
Position “Right”	high amplitude, low frequency

4.1.2.3 Rotary switch for working lights

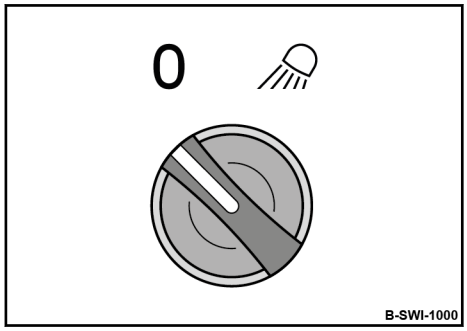

Position “Left”	Working lights off
Position “Right”	Working lights on

Optional equipment

Fig. 42

4.1.2.4 Rotary switch for engine speed

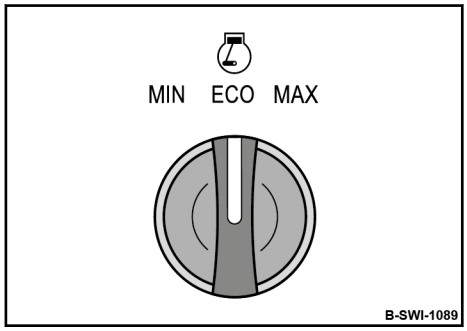

Position “Left”	Idle speed position (MIN)
Position “Middle”	ECO -mode The engine speed automatically adapts to the power requirements. This enables economical operation.
Position “Right”	Full load position (MAX)

Fig. 43

4.1.2.5 Rotary switch for direction indicators

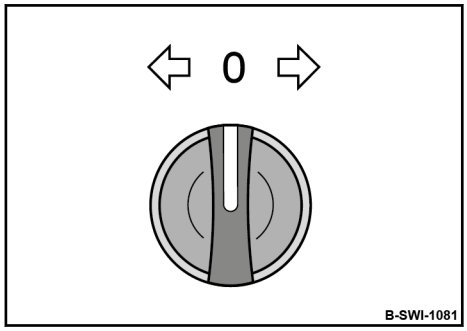

Position “Middle”	Direction indicators off
Position “left or right”	Front and rear direction indicators on the corresponding side are flashing

Optional equipment

Fig. 44

4.1.2.6 Rotary switch for hazard light system

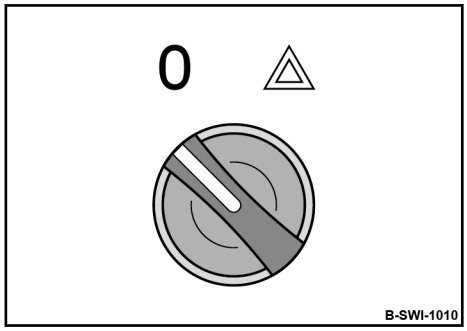

Position "Left"	Hazard light system off
Position "Right"	Hazard light system on

Optional equipment

Fig. 45

4.1.2.7 Rotary switch for lighting

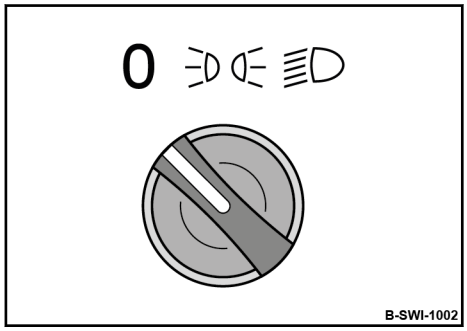

Position "Left"	Light off
Position “Middle”	Side light on
Position "Right"	Travel light on

Optional equipment

Fig. 46

4.1.2.8 Rotary switch for travel speed ranges

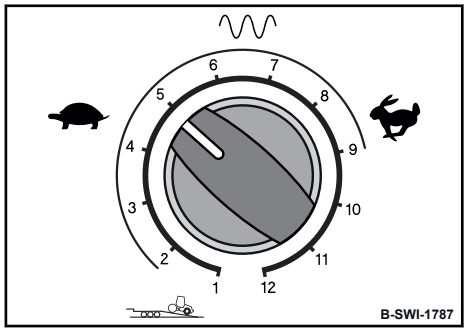

Travel range “1”	Lowest travel speed
Travel range “12”	Maximum travel speed

Vibration is automatically switched off at travel speed range1 and from travel speed range 10.

Fig. 47

4.1.2.9 Starter switch

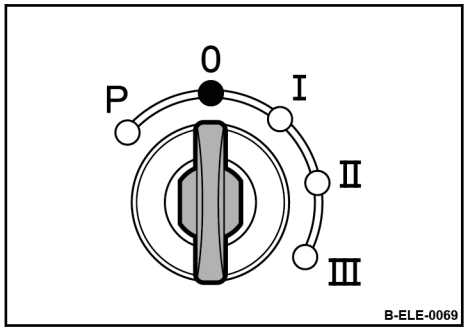

Fig. 48

Position "P"/"0"	Switch the ignition off Ignition key can be removed
Position "I"/"II"	Ignition on All control and warning lights light up for a moment (test function). At low temperatures the pre-heating control light lights up.
Position "III"	Turn further against spring pressure, the engine starts Turn the ignition key back to position "I" when the engine starts.

The starter switch is designed with a re-start lock. The ignition key must first be turned back to position "0" before a new starting attempt can be made.

4.1.2.10 Lever for operating console inclination

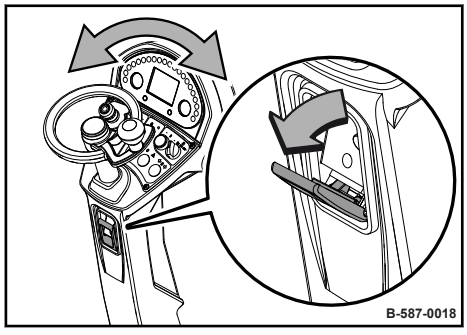

Fig. 49

Pull	Operating console inclination adjustable

Optional equipment

4.1.3 Travel lever

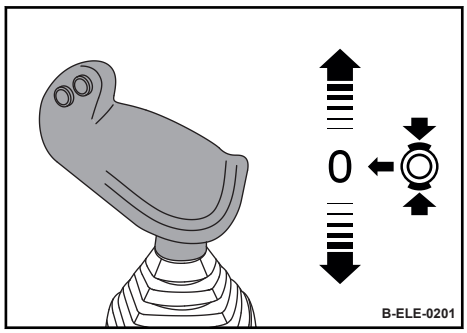

Shift forward	Forward travel
Pull back	Backward travel
Position "Middle"	Service brake position
Position "middle right"	Parking brake position

Fig. 50

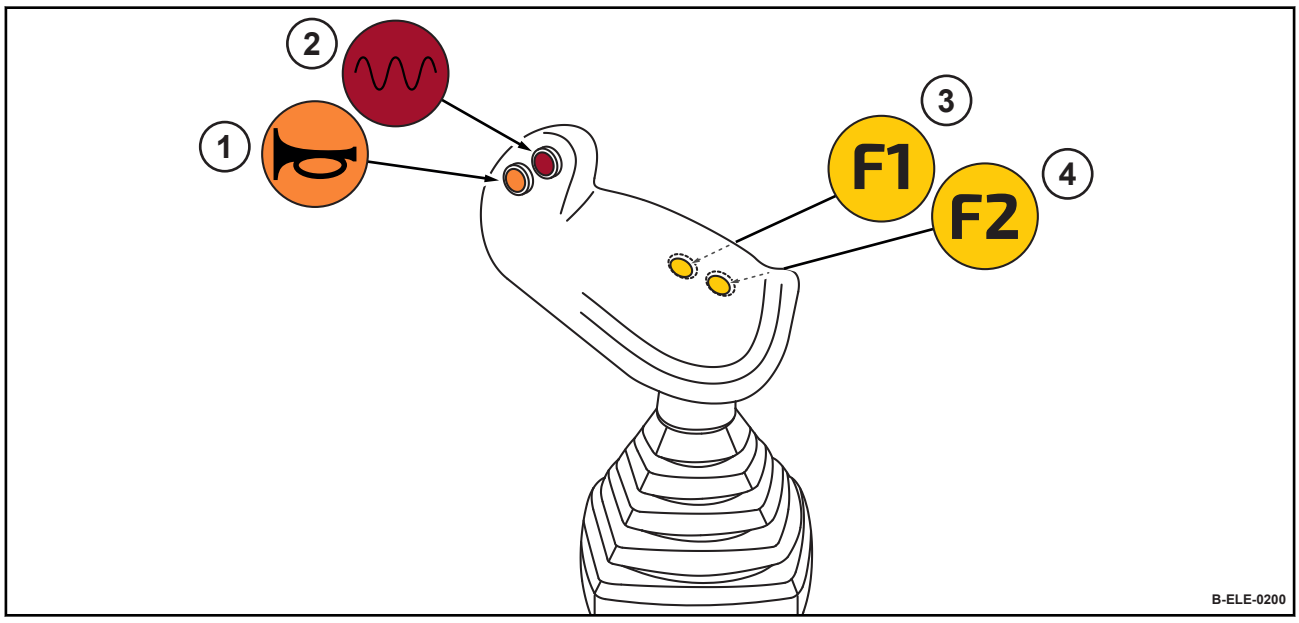

Fig. 51

Pos.	Designation	Note
1	Warning horn	
2	Vibration	Vibration on/off
3	*[F1]* button	INFO 1 display field switchover
4	*[F2]* button	INFO 2 display field switchover

4.1.4 Travel lever with dozer blade control

Optional equipment

Machines with dozer blade are equipped with a different travel lever.

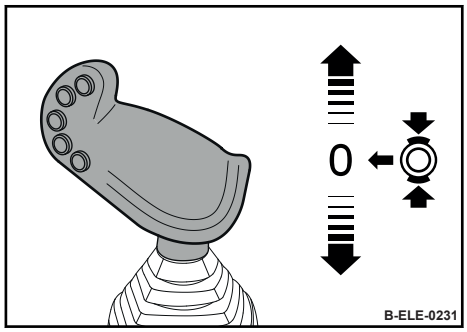

Shift forward	Forward travel
Pull back	Backward travel
Position "Middle"	Service brake position
Position "middle right"	Parking brake position

Fig. 52

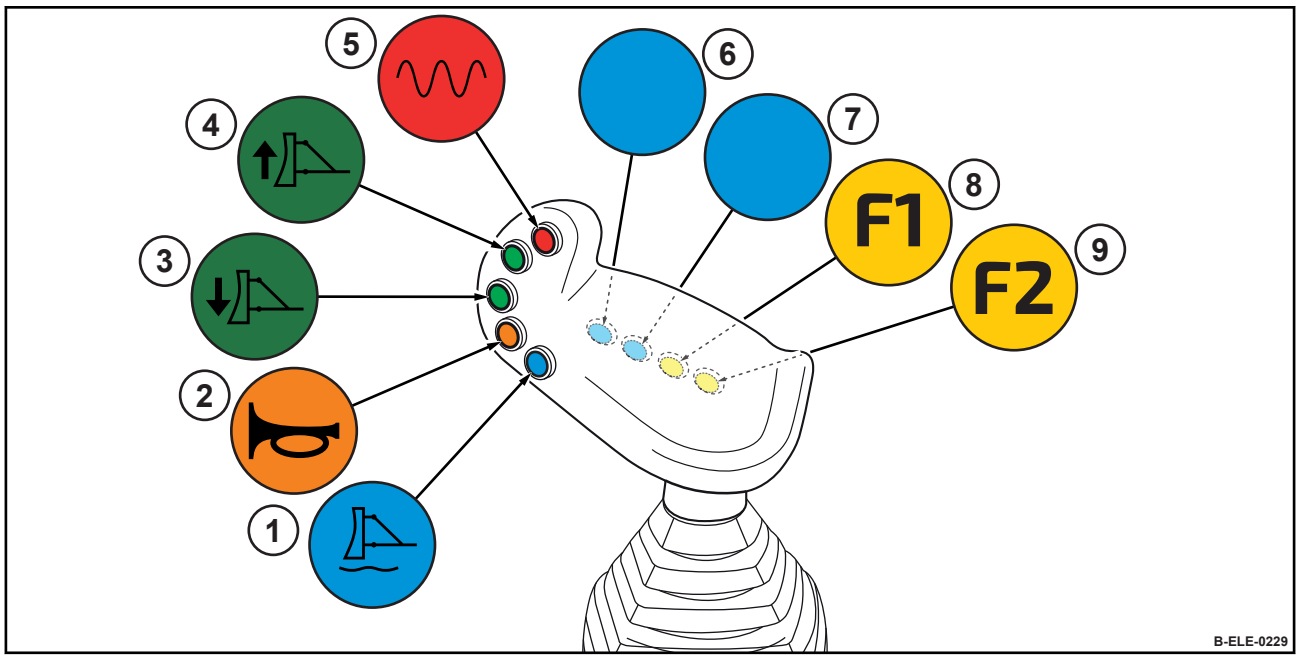

Fig. 53

Pos.	Designation	Note
1	Dozer blade floating position	
2	Warning horn	
3	Lower the dozer blade	
4	Raise the dozer blade	Vibration on/off
5	Vibration	
6	Not assigned	
7	Not assigned	
8	*[F1]* button	Switch over the INFO 1 display field
9	*[F2]* button	Switch over the INFO 2 display field

4.1.5 Driver’s seat

4.1.5.1 Standard driver’s seat

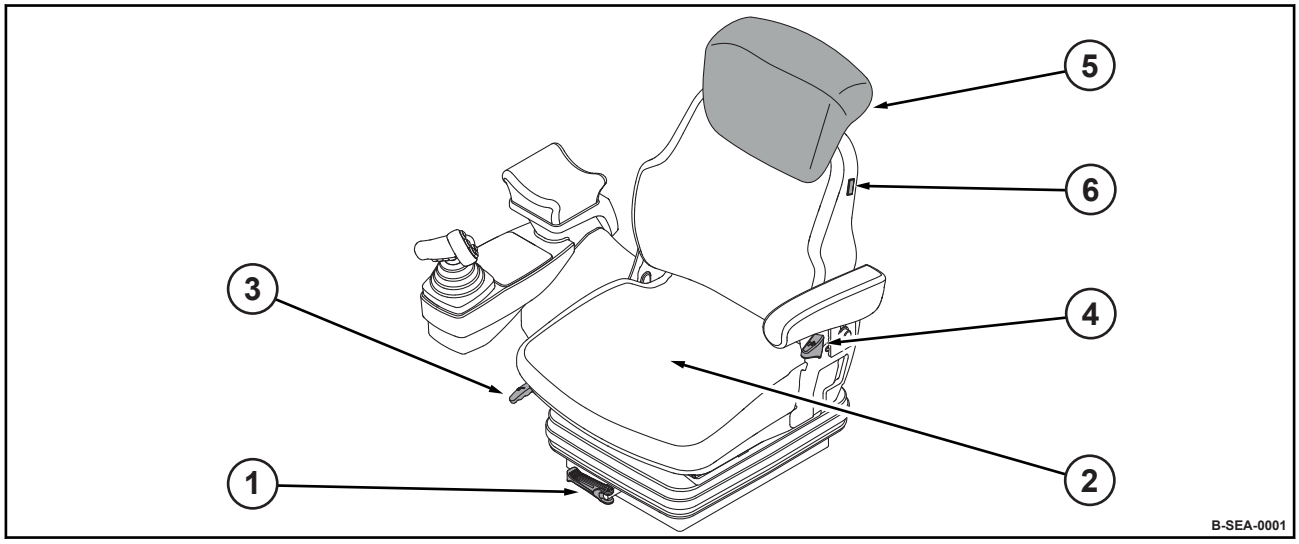

Fig. 54

Pos.	Control element	Setting	Description
1	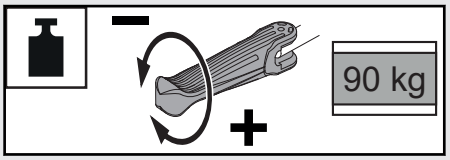	Driver’s weight	Check weight setting in the window. Fold out and turn the handle until the correct driver’s weight has been set.
2	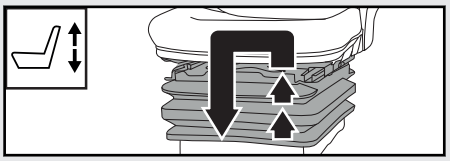	Seat height	Lift up the seat until it locks at the appropriate height. When lifting the seat completely it will sink down to lowest position.
3	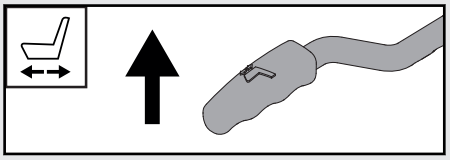	Length adjust-ment	Pull the lever up and push the seat forward or back.

Pos.	Control element	Setting	Description
4	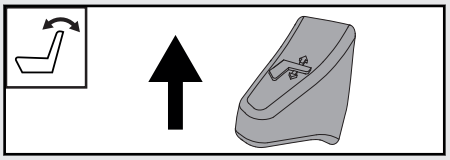	Backrest inclination	Relieve the backrest and pull the lever up.
5	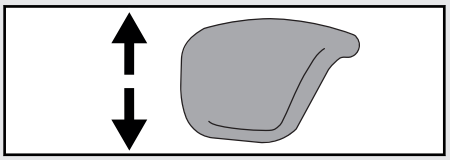	Backrest extension	Adjust the backrest extension by pulling or pushing it in.
6	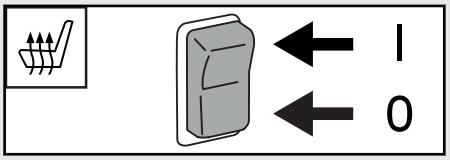	Seat heating *(optional equipment)*	Switch the seat heating on or off using the switch.

4.1.5.2 Comfort driver’s seat

Optional equipment

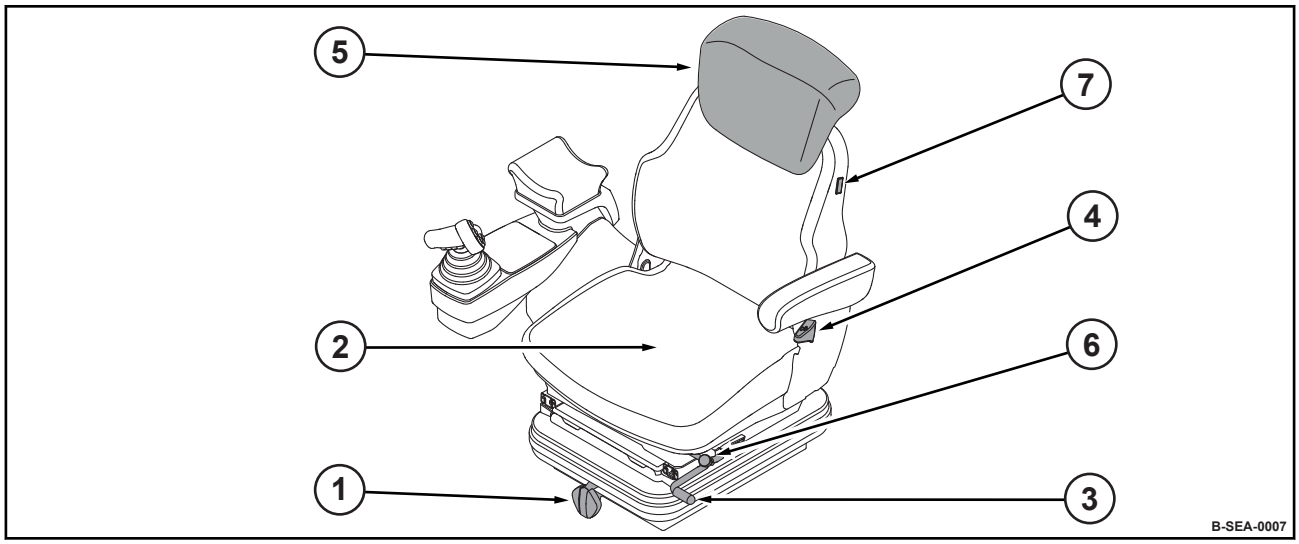

Fig. 55

Pos.	Control element	Setting	Description
1	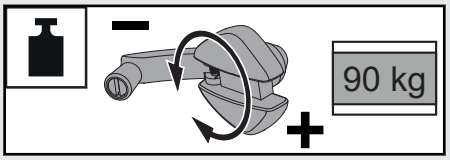	Driver’s weight	Check weight setting in the window. Fold out and turn the handle until the correct driver’s weight has been set.
2	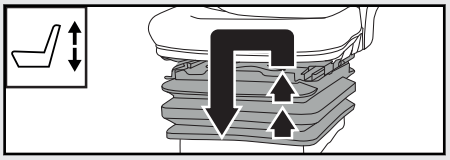	Seat height	Lift up the seat until it locks at the appropriate height. When lifting the seat completely it will sink down to lowest position.
3	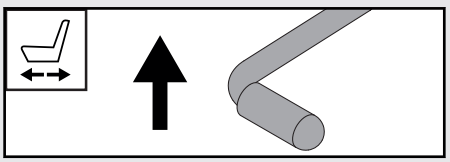	Length adjust-ment	Pull the lever up and push the seat forward or back.

Pos.	Control element	Setting	Description
4	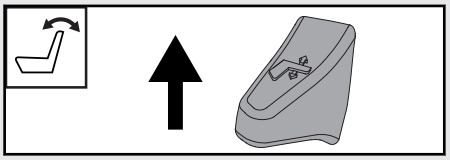	Backrest inclination	Relieve the backrest and pull the lever up.
5	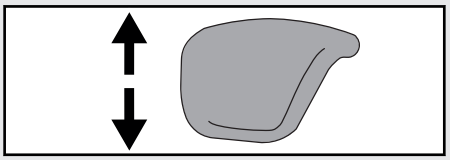	Backrest extension	Adjust the backrest extension by pulling or pushing it in.
6	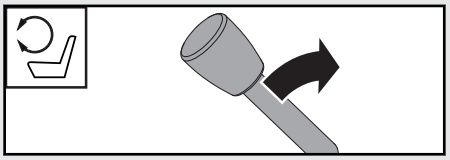	Turning the seat	Pull the lever back, swivel the seat to the desired position and lock it securely in place.
7	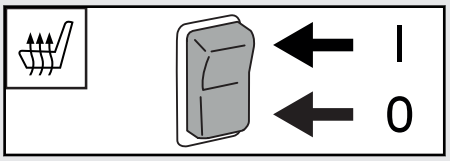	Seat heating *(optional equipment)*	Switch the seat heating on or off using the switch.

4.2 Cabin

4.2.1 Control console cabin

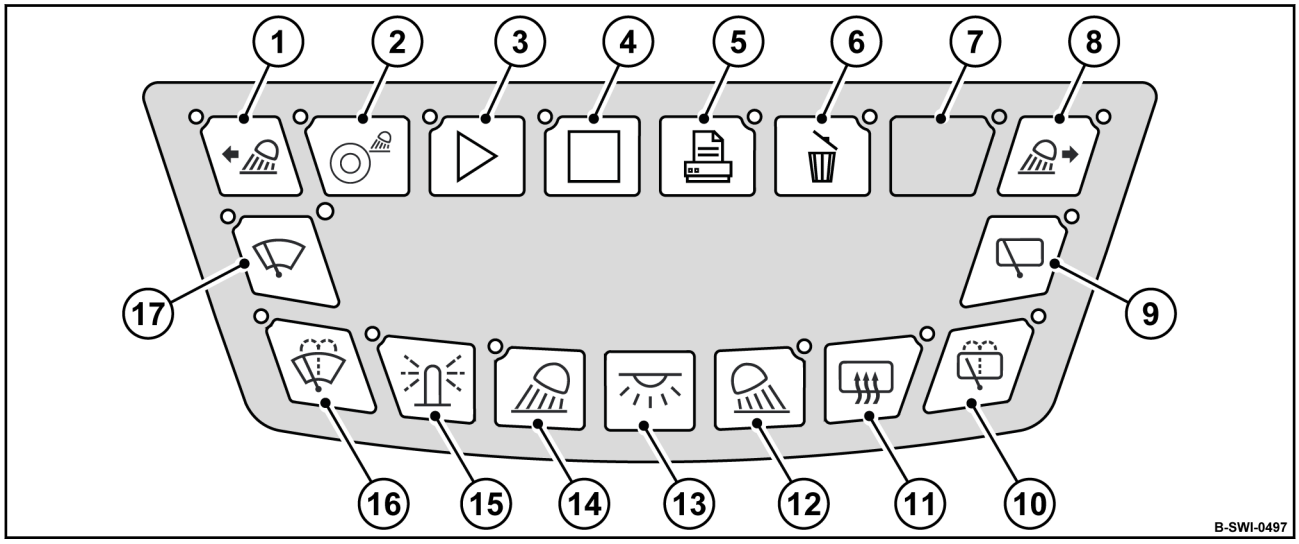

Fig. 56

Pos.	Designation	Note
1	not used	
2	not used	
3	Start measurement	*only for Terrameter with printer* LED lights up: Measurement possible. LED flashing: Measurement active.
4	Stop measurement	*only for Terrameter with printer* LED lights up: E_{VIB}-value has not increased by more than 10% since the last pass.
5	Print measuring report	*only for Terrameter with printer* LED lights up: The measuring report can be printed out.
6	Delete measurement	*only for Terrameter with printer*
7	not used	

Pos.	Designation	Note
8	not used	
9	Rear windscreen wiper	Interval/on/off
10	Washer nozzles for rear wind-screen	
11	Rear windscreen heating	The rear windscreen heating is switched off after three minutes.
12	Rear working lights	
13	Cabin light	
14	Front working lights	
15	Flashing beacon	
16	Washer nozzles for front wind-screen	
17	Front windscreen wiper	Interval/on/off

4.2.2 Heating / air conditioning

4.2.2.1 Rotary switch for air distribution

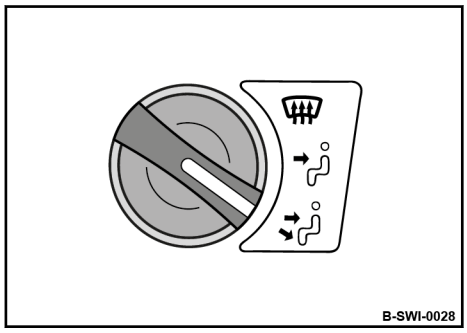

Position "Top"	Air flow to windscreen
Position "Middle"	Air flow to body
Position "Bottom"	Air flow to body and footwell

Fig. 57

4.2.2.2 Rotary switch for cabin temperature

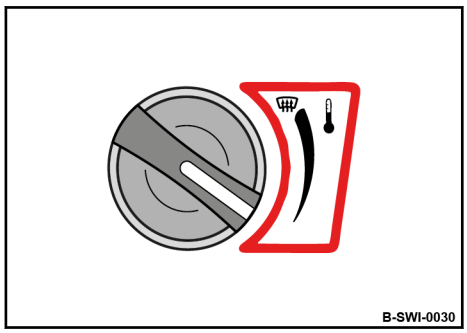

Position "Top"	max. temperature
Position "Bottom"	min. temperature

Fig. 58

4.2.2.3 Rotary switch for fan

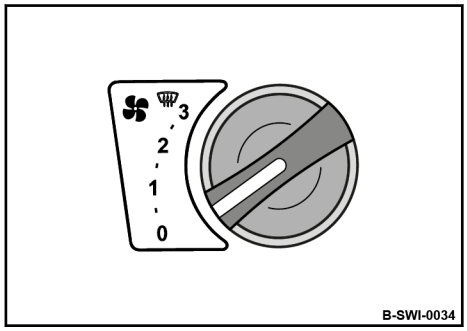

Position “0”	Fan off
Position “1” to “3”	Fan stages of different strengths

Fig. 59

4.2.2.4 Rotary switch for air conditioning system

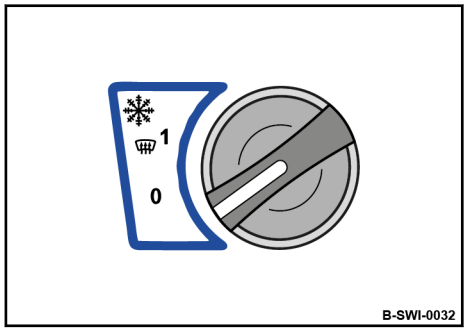

Position "Top"	Air conditioning on
Position "Bottom"	Air conditioning off

Fig. 60

Optional equipment

The air conditioning system only works when the engine is running and the fan is switched on.

4.2.3 12 V DIN socket

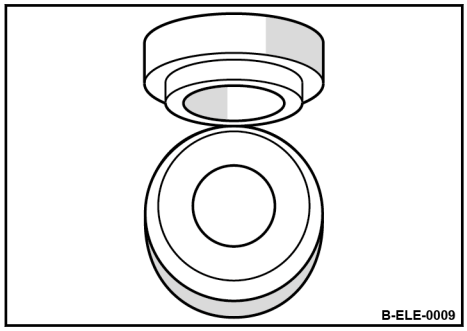

Permanent current, loadable up to 20 A.

Fig. 61

4.2.4 Monitor for reversing camera

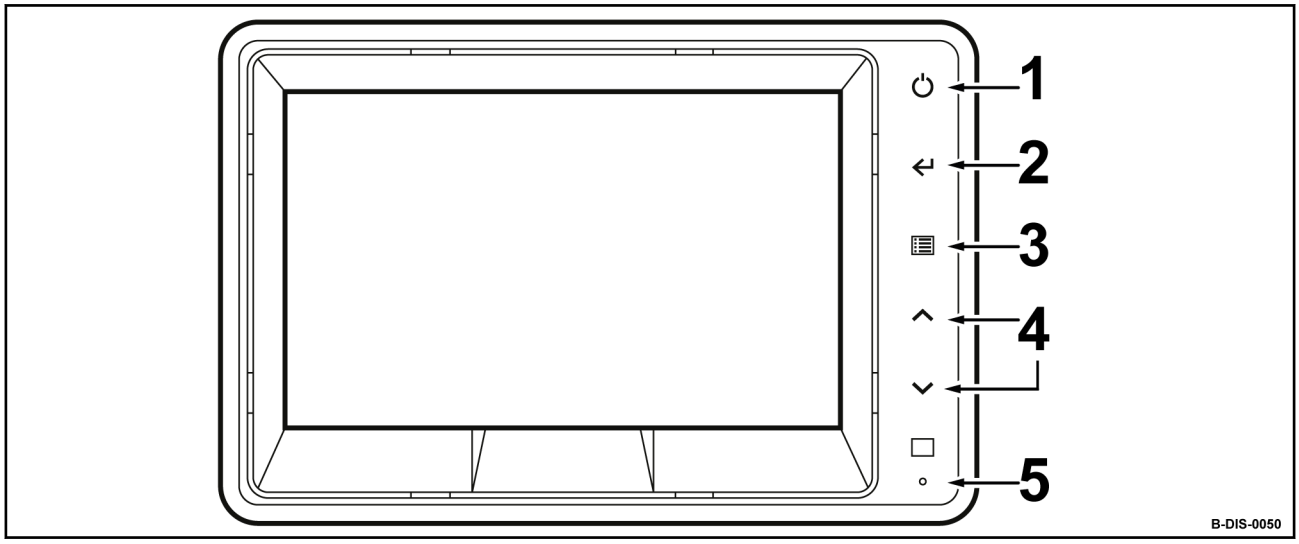

Fig. 62

Pos.	Designation	Note
1	Button on/off	
2	Push button for camera selection	Within menus to confirm the selection.
3	Push button for menu selection	Press briefly (approx. 0.5 s), to change to the "DISPLAY MENU". Press long (approx. 2 s), to change to the "MAIN MENU".
4	Push button arrow up and push button arrow down	Change the selection in a menu.
5	Light sensor	

Optional equipment

Clean the screen only with a soft, possibly damp cloth.

» Continued on the next page

Clean the ventilation slots on the monitor occasionally with a cloth or a brush.

4.2.5 Fire extinguisher

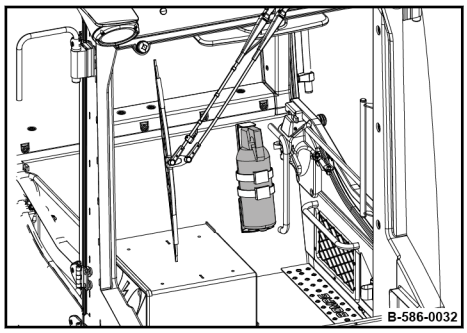

Fig. 63

Optional equipment

NOTICE!

Components may get damaged!

– When retrofitting a fire extinguisher, install it only in this position.

4.3 Engine compartment

4.3.1 Main battery switch

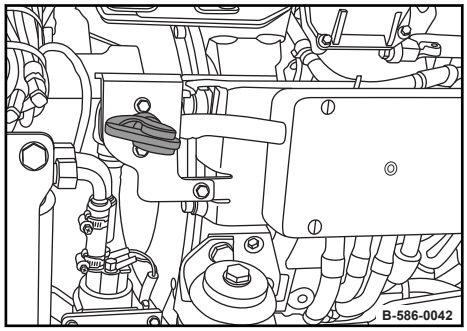

Fig. 64

Position “on”	Main battery switch locked Normal position, operation
Turn anticlock-wise	Main battery switch can be pulled out Disconnects the batteries from the on-board electrics, e.g. to prevent unauthorised use Individual control units may still be connected to the on-board electrics despite the main battery switch being pulled out

4.4 Outside of machine

4.4.1 Reversing camera

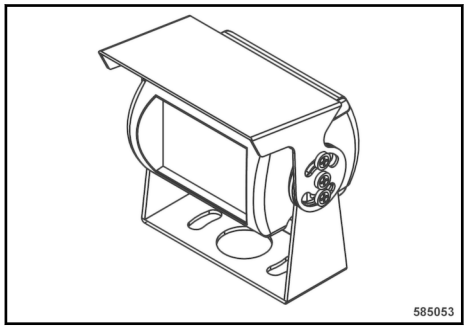

Fig. 65

With the monitor connected it enables the driver to check the working range behind the machine without direct vision.

Optional equipment

Indicators and control elements – Outside of machine

5 Checks prior to start up

5.1 Notes on safety

If the following tests reveal damages or other defects, the machine must not be operated, until these deficiencies have been corrected.

Do not operate the machine with defective indicators and control elements.

Safety installations must not be removed or made ineffective.

Do not change any fixed settings.



WARNING!

Health hazard caused by fuels and lubricants!

– Safety regulations and environmental protection regulations must be followed when handling fuels and lubricants *Chapter 3.4 ‘Handling fuels and lubricants’ on page 32*.



WARNING!

Danger of injury caused by rotating parts!

– Before starting work on the machine make sure that the engine can not be started.



CAUTION!

Danger of being injured by the engine hood dropping down!

– Always secure an opened engine hood.

Park the machine safely *Chapter 6.8 ‘Parking the machine in secured condition’ on page 131*.

Open and secure the engine hood *Chapter 8.2.1 ‘Open and secure the engine hood’ on page 152*.

Close the engine hood again after work is completed.

5.2 Visual inspections and function tests

1. Check the hydraulic oil tank and lines for condition and leaks.
2. Check the fuel tank and lines for condition and leaks.
3. Check the cooling system for contamination, damage and leaks.
4. Check the bolted connections are tight and secure.
5. Check the engine and exhaust system for leaks.
6. Check the belt drive for damage.
7. Check the machine for contamination and damage.
8. Check function of steering.
9. Check function of brake.
10. Check emergency stop function.
11. Check function of backup alarm system.
12. Check the mirror settings and condition.
13. Check function of seat contact switch.

5.3 Checking the engine oil level

NOTICE!
Danger of engine damage!
- If the engine is warm, shut it down and check the oil level after five minutes. With a cold engine the oil level can be checked immediately.
- Use only oil of the permitted specification *Chapter 8.3.1 'Engine oil' on page 156*.

Protective equipment:
- Working clothes
- Protective gloves

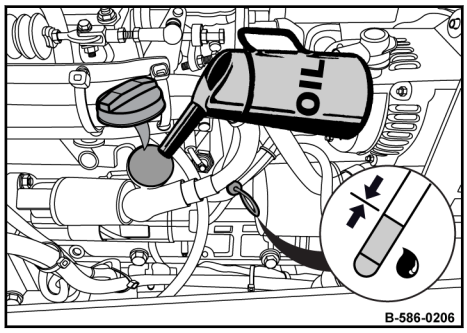

Fig. 66

1. Pull the dipstick out, wipe it off with a lint-free, clean cloth and reinsert it until it bottoms.
2. Pull the dipstick out again.
   ⇨ The oil level must be between the “MIN” and “MAX” marks.
3. For topping up, clean the area around the filler opening.
4. Unscrew the cap and fill in engine oil up to the “MAX” mark.
5. Close the cap.
6. Push the dipstick in.

5.4 Checking the fuel level; topping up fuel

5.4.1 Checking the fuel level

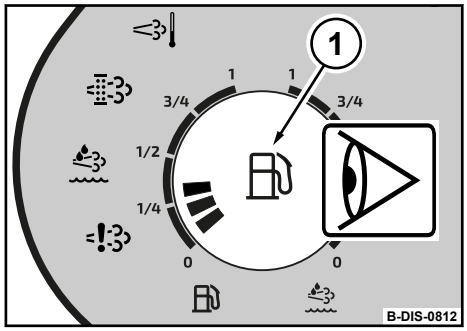

Fig. 67

1. Check the filling level on the fuel gauge.
   ⇨ Depending on the filling level, the fuel level warning light appears (1):
   - Warning light lights up = filling level 7 - 12 %
   - Warning light flashes = filling level < 7%
2. Refuel if required but only after shutting down the engine first.

5.4.2 Refuelling

NOTICE!
Danger of engine damage!
- Never run the fuel tank empty, as otherwise the fuel system needs to be bled.
- Monitor the entire refuelling process.
- Contaminated fuel can cause malfunction or even damage of the engine. If necessary, fill in fuel through a screen filter.
- Use only fuel of the permitted specification ↬ *Chapter 8.3.2 ‘Fuel’ on page 157*.

Protective equipment:

- Working clothes
- Safety shoes
- Protective gloves

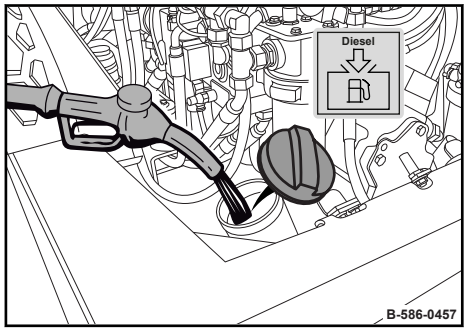

Fig. 68

1. Clean the area around the filling port.
2. Unscrew the cap and fill with fuel.
3. Close the cap.

5.5 Checking the hydraulic oil level

NOTICE!
Components may get damaged!
- Check the hydraulic oil level at room temperature (approx. 20 °C (68 °F)).
- If, during the daily inspection of the oil level the hydraulic oil level is found to have dropped, check all lines, hoses and components for leaks.
- Use only oil of the permitted specification *Chapter 8.3.4 'Hydraulic oil' on page 160*.

Protective equipment:
- Working clothes
- Protective gloves

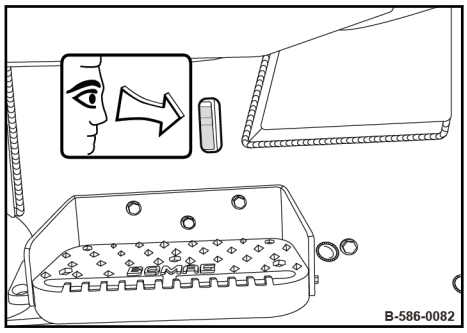

Fig. 69

1. Check the oil level in the inspection glass.

Normal level	approx. 3 cm (1.2 in) below the top edge of the inspection glass
Minimum level	Middle of inspection glass

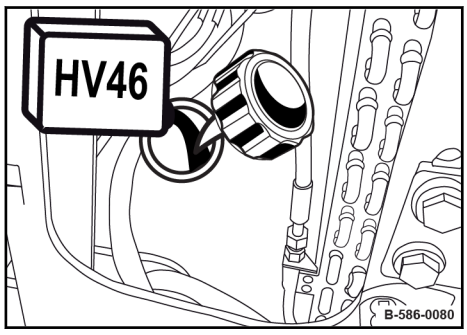

Fig. 70

2. For topping up, clean the area around the filler opening.
3. Remove the cap and fill in hydraulic oil.
4. Close the cap.

5.6 Checking the coolant level

NOTICE!
Danger of engine damage!
- If, during the daily inspection the coolant level is found to have dropped, check all lines, hoses and engine for leaks.
- Do not use radiator sealant to seal leaks.
- Use only coolant of the permitted specification *Chapter 8.3.3 'Coolant' on page 158*.

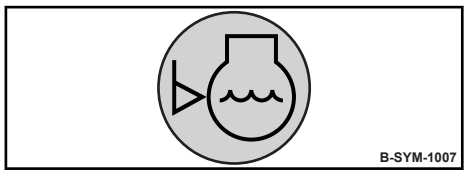

Fig. 71

A coolant level which is too low is indicated by the coolant level warning light.

Protective equipment:
- Working clothes
- Safety shoes
- Protective gloves
- Safety goggles

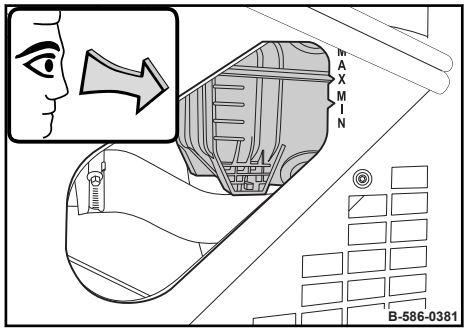

Fig. 72

1. Check the coolant level in the compensation tank.
   ⇨ The coolant level must be between the "MIN" and "MAX" marks.

WARNING!
Danger of scalding by hot fluid!
- Open the compensation tank only when the engine is cold.
- Wear your personal protective equipment (protective gloves, protective clothing, goggles).

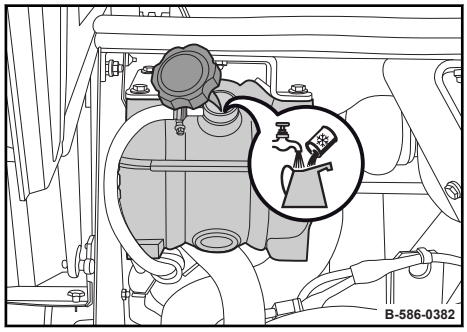

Fig. 73

2. For topping up, clean the area around the filling port.
3. Unscrew the cap and fill with coolant up to the “MAX” mark.
4. Close the cap.

5.7 Checking wheels and tyres

WARNING!

Danger of being injured by bursting tyres!

- Wear your personal protective equipment (safety shoes, gloves, goggles, hard hat).
- When checking the tyre pressure stand in the extended path of the tyre track.
- Use an air hose with a length of min. 6 meters.
- Never exceed the permitted max-imum pressure.

The tire pressure can be adapted to the operating conditions within the specified limits.

A reduced tire pressure improves the traction especially on sandy soils.

Higher tires pressures improve the driving stability of the machine.

The total height of the machine can also be influenced by changing the tire pressure.

Protective equipment:

- Safety shoes
- Protective gloves
- Safety goggles
- Hard hat

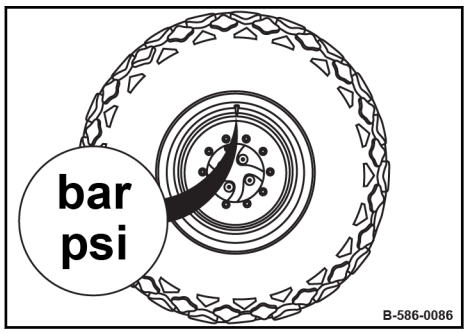

Fig. 74

1. Move the machine until the tire inflation valve (1) is in top position.
2. Park the machine in secured condition ↬ *Chapter 6.8 'Parking the machine in secured condition' on page 131*.
3. Check the tyres for cuts, bulges, damaged rims, missing wheel studs or nuts.
4. Have damaged wheels or tyres replaced immediately.
5. Unscrew the valve caps and check the front and rear tire pressure, correct if necessary.

   Ensure equal pressure in all tires.

   > *Tire pressure, nominal value* ↬ *Chapter 2 'Technical data' on page 15*

6. Screw the valve caps back on again.

6 Operation

6.1 Setting up the workplace

1. Park the machine safely *Chapter 6.8 ‘Parking the machine in secured condition’ on page 131*.
2. Adjust the driver’s seat.
3. Tilt the operating console into the desired position *(optional equipment)*.

6.2 Electronic immobilizer

Optional equipment

The electronic immobilizer prevents the machine from starting and vibration.

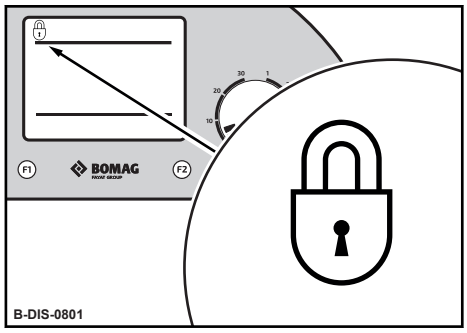

Fig. 75

An active immobilizer is indicated on the display by the immobilizer indicator light.

If the start switch is in position "0" for longer than 15 minutes, the electronic immobilizer is activated again.

1. Turn the starter switch to position "I" .

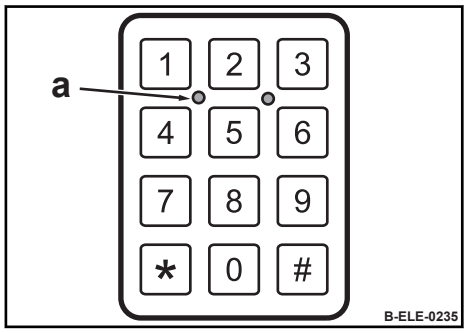

Fig. 76

2. Enter the six-digit user code.

⇨ When entering the code, the light emitting diode (a) lights up with every digit.

3. Press the diamond button.

⇨ The electronic immobilizer is now off.

6.3 Starting the engine

Prerequisites:

- Main battery switch is switched on.
- Emergency stop switch is unlocked.
- Travel lever in “Middle right” position (parking brake closed).

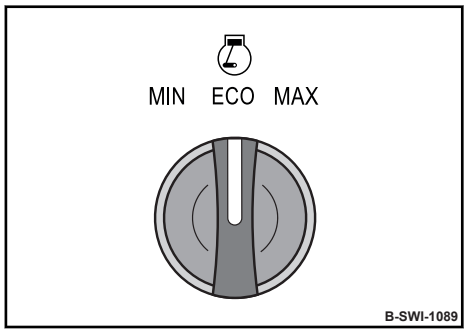

Fig. 77

1. Turn the rotary switch for engine speed to “Middle” position (ECO mode).

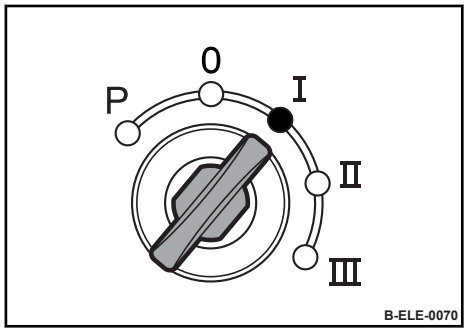

Fig. 78

2. Turn the ignition key to position “I”.
   ⇨ All control and warning lights in the instrument cluster light up for a moment.

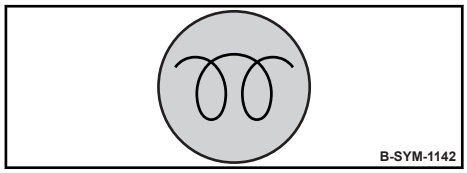

Fig. 79

3. If the pre-heating control light lights up, wait until it goes out before starting the engine.

The starter switch is designed with a re-start lock. The ignition key must first be turned back to position “0” before a new starting attempt can be made.

NOTICE!

Components may get damaged!

– Run the starting process for maximum 20 seconds without interruption and pause for a minute between starting attempts.
– If the engine has not started after two attempts, determine the cause.

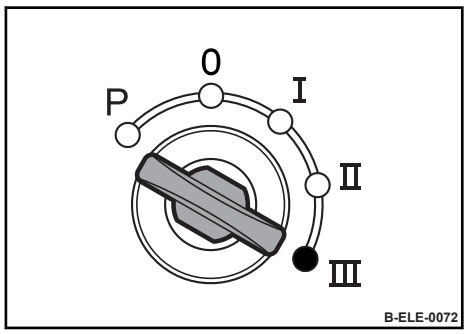

Fig. 80

4. Turn the ignition key through position “II” to position “III”.

⇨ The starter cranks the engine.

NOTICE!

Danger of engine damage!

– Warm up engine for a short while before starting work. Do not operate the engine immediately under full load.

6.4 Travel mode

6.4.1 Preliminary remarks and safety notes

Driving up and down slopes

DANGER!
Danger to life caused by the machine turning over!
– Never drive across a slope.
– Always drive straight up or down a slope.

Do not drive on gradients exceeding the maximum gradeability of the machine *Chapter 2 'Technical data' on page 15*.

Soil conditions and weather influences impair the gradeability of the machine.

Wet and loose soil considerably reduces traction of the machine on inclinations and slopes. Increased danger of accident!

Leaving the seat while travelling

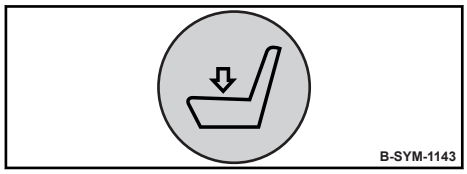

Fig. 81

If the operator leaves his seat while travelling, the driver's seat warning light lights up.

The warning buzzer sounds.

After approx. 3 seconds, the machine brakes to a standstill.

Before being able to drive again, the travel lever must first be shifted to the right into the parking brake position.

Raising the arm console during travel

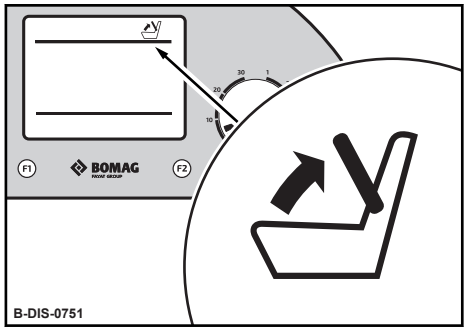

Fig. 82

If the arm console is raised during travel, the control light for arm console lights up on the INFO 3 display field.

The warning buzzer sounds.

After approx. 3 seconds, the machine brakes to a standstill.

Before being able to drive again, the travel lever must first be shifted to the right into the parking brake position.

6.4.2 Driving the machine

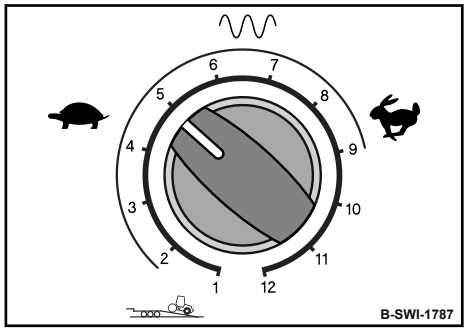

Fig. 83

1. Fasten your seat belt.
2. Pre-select the desired travel speed range.

> *The travel speed range can also be switched over while driving.*

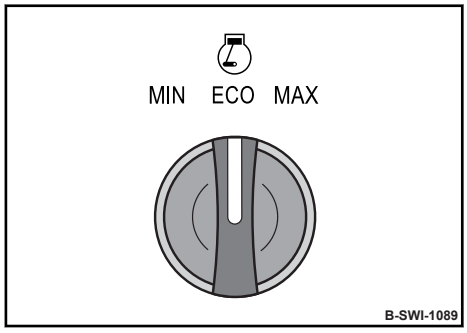

Fig. 84

3. Turn the rotary switch for engine speed to “Middle” position (ECO mode).

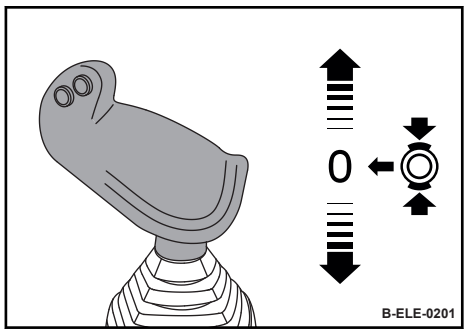

Fig. 85

4. Disengage the travel lever to the left out of parking brake position and move it slowly to the required travel direction.
   ⇨ The further the travel lever is moved forwards or backwards, the faster the machine will travel.
5. Set the travel lever to “middle” position to stop the machine.
   ⇨ The machine decelerates to a standstill.
6. Always apply the parking brake when stopping on inclinations or slopes.

6.4.3 Applying the parking brake

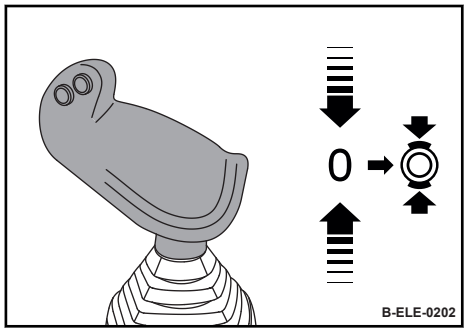

Fig. 86

1. Shift the travel lever to the “middle” position.
   ⇨ The machine decelerates to a standstill.
2. Engage the travel lever to the right (parking brake position).
   ⇨ The parking brake warning light lights up.

6.5 Working with vibration

6.5.1 Preliminary remarks and safety notes

NOTICE!

Possible damage to neighbouring buildings!

– When compacting with vibration you must always check the effect of the vibration on nearby buildings and underground supply lines (gas, water, sewage, electric power).
– If necessary stop compacting with vibration.

NOTICE!

Components may get damaged!

– Do not activate the vibration on hard (frozen, concrete) ground.

Vibration at standstill causes transverse marks

- Switch the vibration on only after shifting the travel lever to the desired travel direction.
- Switch the vibration off before stopping the machine.

6.5.2 Switching the vibration on and off

Vibration is automatically switched off at travel speed range1 and from travel speed range 10.

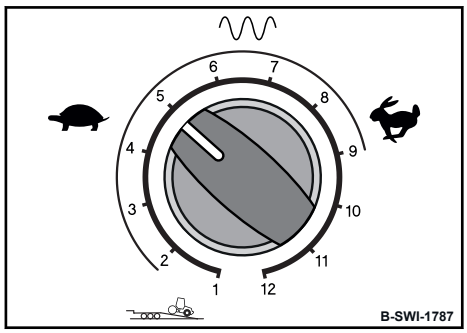

Fig. 87

1. Turn the rotary switch for travel speed ranges to the desired position.

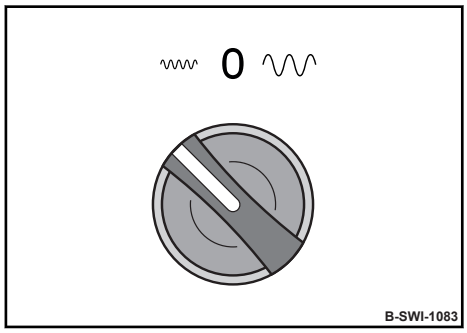

Fig. 88

2. Preselect the desired amplitude with the rotary switch for amplitude pre-selection.

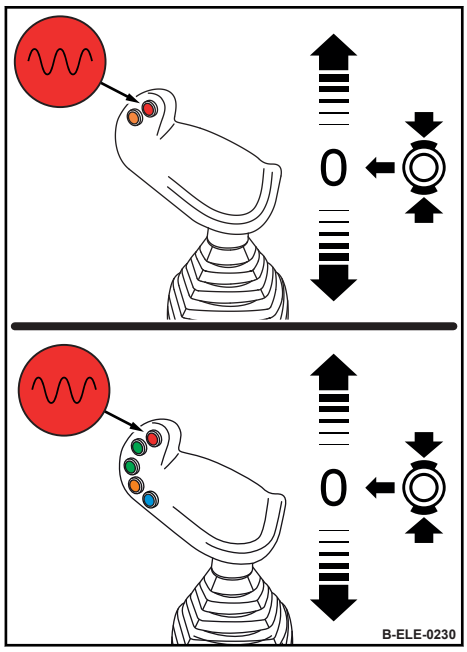

Fig. 89

3. Shift the travel lever slowly in the desired travel direction.
4. Press the vibration push button on the travel lever.

   ⇨ Vibration is switched on.
5. Perform passes in forward and reverse direction on the same track, until the E_{Vib} value hardly increases any more compared to the previous pass.
6. Press the vibration push button on the travel lever once again to switch off vibration.

   ⇨ Vibration is switched off.

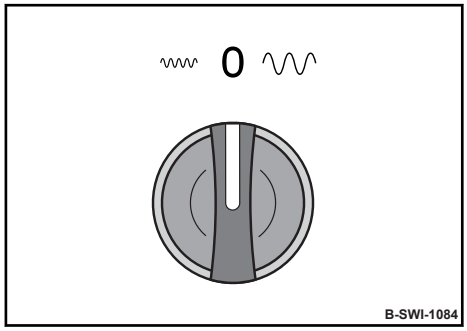

Fig. 90

7. After finishing work, turn the rotary switch for amplitude pre-selection back to position “0”.

6.6 ECONOMIZER

Optional equipment

The ECONOMIZER continuously informs the driver about the compaction status of the layer being compacted and enables the detection and targeted post-compaction of local weak spots.

The acceleration sensor on the drum measures the reaction of the road subbase.

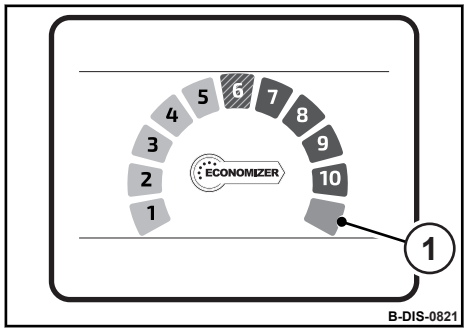

Fig. 91

- With the vibration switched on, the measuring value for the soil stiffness is shown on a scale (1–10).
- Intermediate steps are displayed as a hatched area on the scale.
- If the display value does not increase any further, no further compaction can be achieved with this machine. The maximum display value (10) is not always reached.
- If the drum is in jump operation, the display (1) flashes.

In order to achieve the desired soil stiffness, one must always perform a suitable reference measurement before compaction is started.

The reference measurement is used to determine which display value of the ECONOMIZER corresponds with the measuring value for soil stiffness.

6.7 Terrameter

6.7.1 Terrameter display

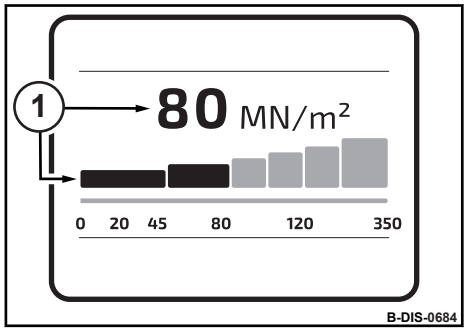

Fig. 92

The current compaction value (1) is shown on the display *'E_{VIB} value'*.

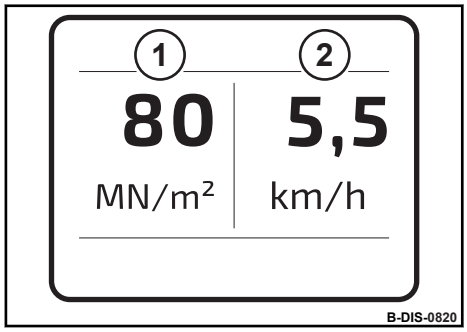

Fig. 93

In addition to the compaction value (1), the machine's current travel speed (2) is also shown on the *'travel speed and E_{VIB} value'* display.

The displays allow weak spots in compaction to be identified and excess passes can be prevented.

Optional equipment

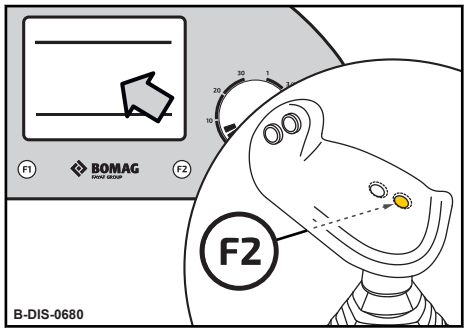

Fig. 94

1. Press the *[F2]* button on the travel lever until the *' travel speed'* or *'travel speed and E_{VIB} value'* display appears.

   ⇨ When working with vibration, the actual E_{VIB} value will now be displayed during the compaction pass as well as the travel speed where applicable.

6.7.2 Terrameter with printer

Preliminary remarks

Optional equipment

On the Terrameter with printer, compaction measuring values (E_{VIB} values) can be stored, compared and printed out.

The E_{VIB} values recorded during different passes can only be compared if the recording of measuring values took place with the same amplitude, frequency and travel speed and on exactly the same track.

A change in travel speed would affect the measuring result, because e.g. with a slow travel speed per pass the energy introduced into the ground is higher and, when comparing all passes, a higher E_{VIB} value would be displayed.

Measuring values must only be compared for passes performed in the same direction.

Since the transducer unit is mounted on the left hand side of the drum, it is necessary to arrange the tracks so that track 1 is processed first, followed by further tracks offset to the left.

The maximum track length is 150 m (492 ft) per pass.

If the vibration is switched off or the travel lever is returned to neutral position, the measurement is automatically stopped and the measuring report is printed out in form of a line diagram.

The following text describes a measuring pass in forward travel. Measuring passes in backward travel must be performed accordingly.

Measuring pass with Terrameter

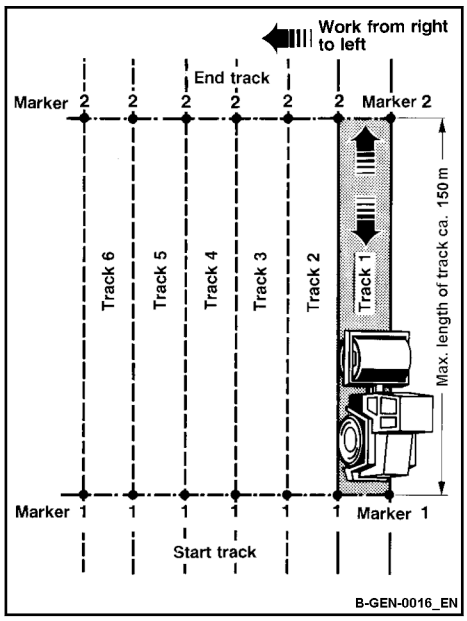

Fig. 95

1. Mark the track to be compacted.
2. Select the *'E_{VIB} value'* or *'travel speed and E_{VIB} value'* display.
   ⇨ When working with vibration, the actual E_{VIB} value will now be displayed as well as the travel speed where applicable.

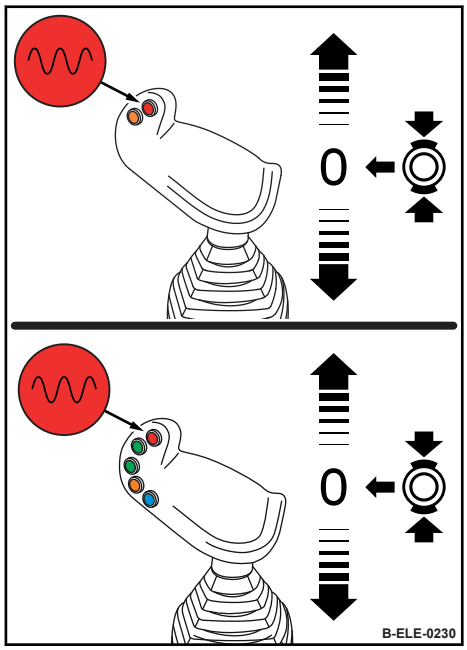

Fig. 96

3. Shift the travel lever to the desired travel direction.
4. Press the vibration push button on the travel lever.
   ⇨ Vibration is switched on.

> *Before reaching mark 1, the nominal exciter shaft speed must have been reached and a valid E_{VIB} value displayed.*

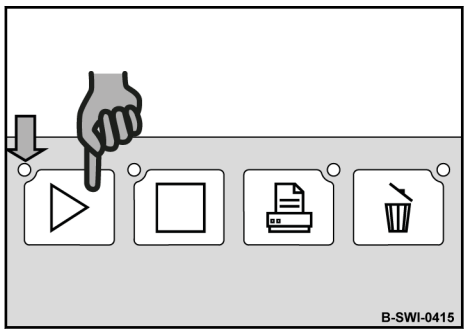

Fig. 97

5. When reaching mark 1 press the “start measurement” push button to start the measuring pass.
   ⇨ The LED will flash during the measuring pass.

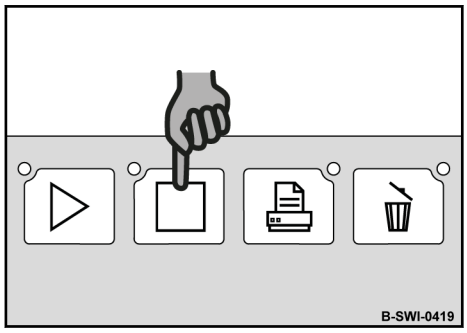

Fig. 98

6. When reaching mark 2 press the “stop measurement” button to stop the measuring pass.
   ⇨ The first forward pass is finished.
7. Return to mark 1.

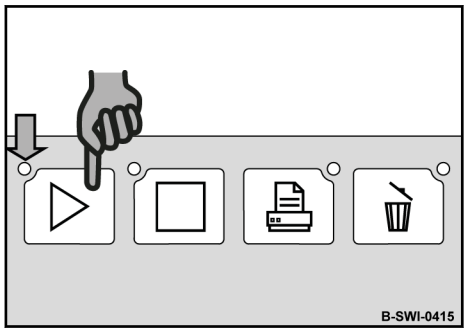

Fig. 99

8. For the second pass, press the “start measurement” push button to start the measuring pass when reaching mark 1.
   ⇨ The measuring pass will be continued.

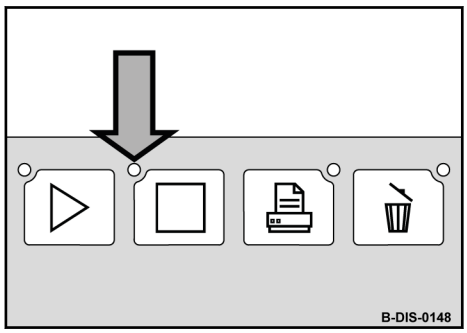

Fig. 100

9. Keep repeating these passes until there is no considerable increase in the E_{VIB} value.
   ⇨ The LED above the “stop measurement” button lights up, if the E_{VIB} value does not increase more than 10% in comparison to the previous pass.
10. Change to the next track and repeat this whole process of recording measuring values.

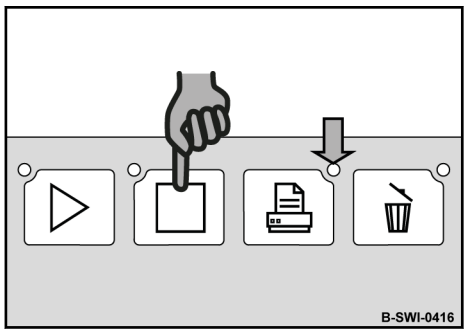

Fig. 101

11. Press the “stop measurement” button to end a measuring pass.

⇨ The LED of the printer icon lights up and indicates, that the measuring report can be printed.

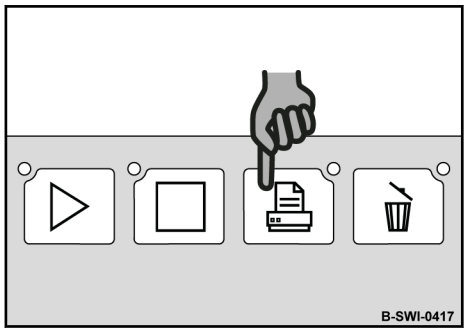

Fig. 102

12. Press the “print measuring report” button to print out a measuring pass.

⇨

– *Press short: Line diagram*
– *Press long (> 5 seconds): Bar chart*

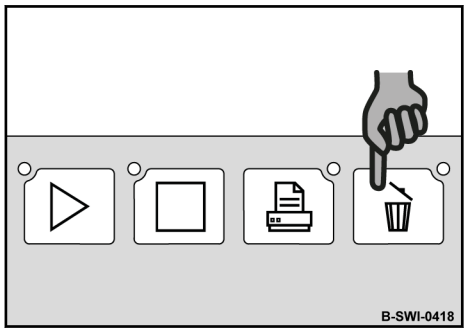

Fig. 103

13. Operate the “Delete measurement” button to delete all saved data.

6.7.3 Line graph (E_{VIB})

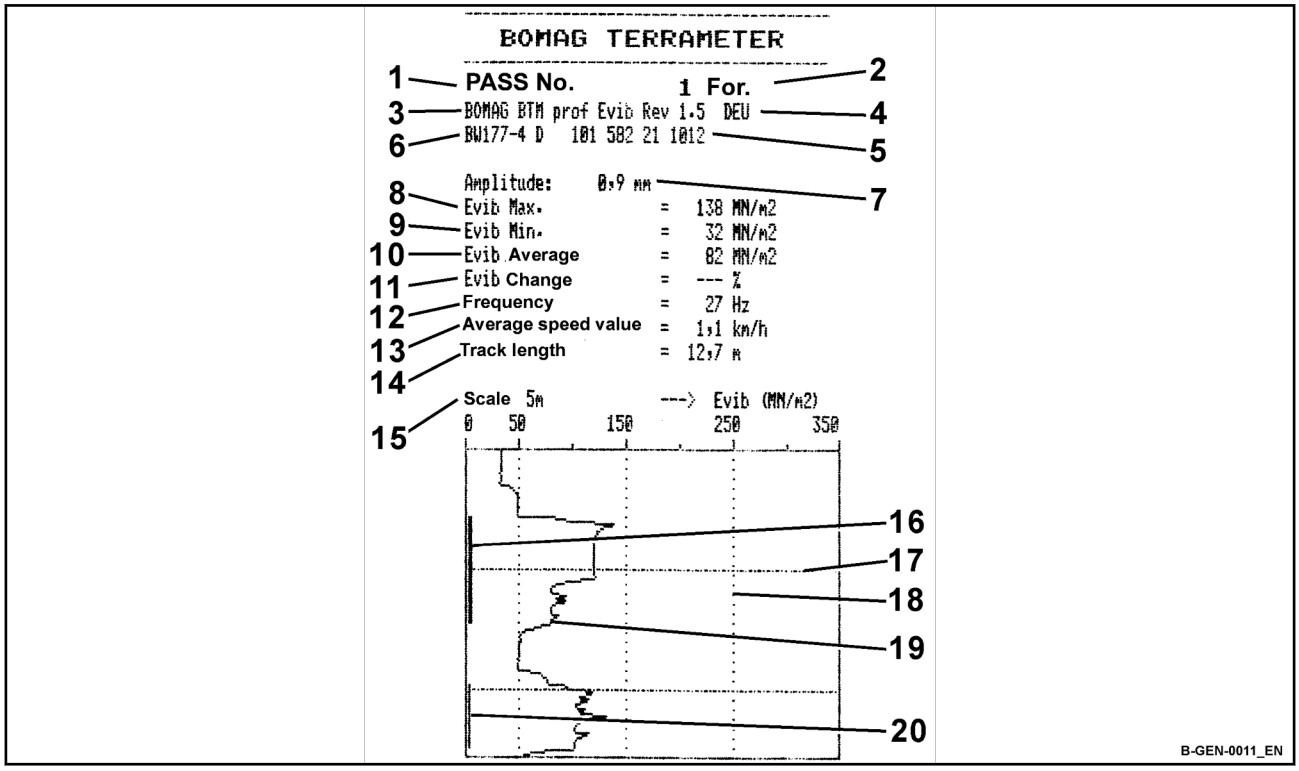

Fig. 104

Pos.	Designation	Note
1	Pass	Total number of measured passes on this track.
2	Travel direction	
3	Software status of the measuring equipment	
4	set language	Please contact our Customer Service if you want to change the language.
5	Serial number of machine	
6	Machine type	
7	Amplitude	Display of the vertical amplitude the machine has worked with on this track.
8	Maximum E_{VIB}-value	

Pos.	Designation	Note
9	Minimum E_{VIB}-value	
10	Mean E_{VIB}-value	
11	E_{VIB}-change	E_{VIB}-change in %. This always refers to the previous pass in the same travel direction.
12	Medium frequency	
13	Mean travel speed	
14	Track length	
15	Raster division in longitudinal direction	Division of the measuring track (track length) into fixed sections. Is graticule serves the purpose of pinpointing individual measuring values on the measuring curve.
16	Identification of jump operation (thick line)	Indicates excessive jumping of the drum on the marked track section. Select a smaller amplitude, if necessary!
17	Longitudinal raster line	
18	Measuring value raster line	
19	E_{VIB}-curve (in MN/m^2)	Shows the E_{VIB}-value at any point of the rolled track. The raster line enables the location related assignment of the E_{VIB}-value and the location of a fault (excessive or insufficient compaction).
20	Identification of jump operation (thin line)	Indicates jumping of the drum on the marked track section (thin line).

The bar diagram differs from the line diagram only by the graphic representation of measuring values.

In the bar diagram the mean values of 5 m sections are shown as bars.

6.8 Parking the machine in secured condition

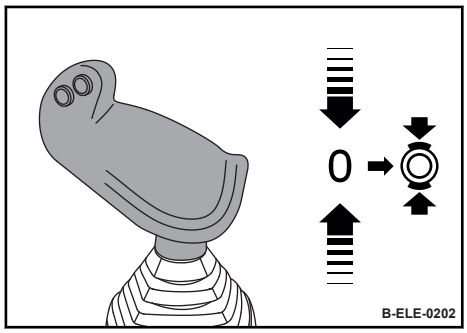

Fig. 105

1. Drive the machine onto level, firm ground.
2. To stop the machine return the travel lever to the middle position and shift it to the right to lock (parking brake position).
   ⇨ The parking brake warning light lights up.

NOTICE!
Danger of engine damage!
– Do not shut down the engine all of a sudden from full load speed, but let it idle for about two minutes.

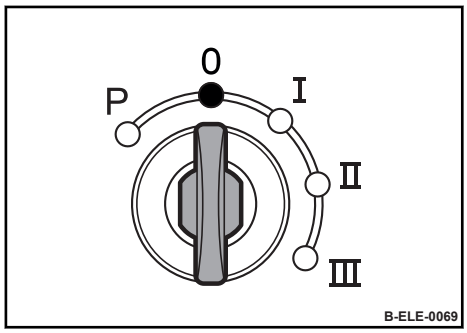

Fig. 106

3. Turn the ignition key to position “0” and pull it out.
4. Open and secure the engine hood
   Chapter 8.2.1 ‘Open and secure the engine hood’ on page 152.

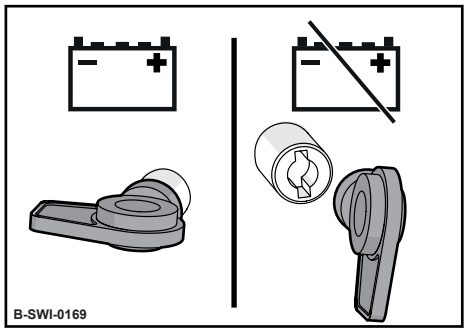

Fig. 107

5. Turn the main battery switch anticlockwise and pull it out.
6. Close the engine hood and lock it if necessary.

6.9 Operating the heating / air conditioning system

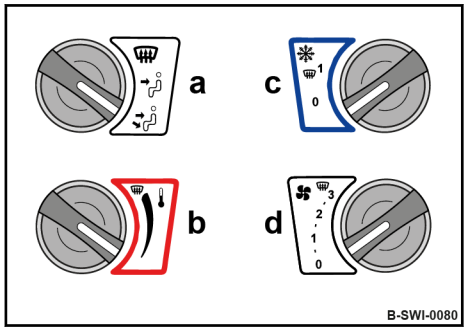

Fig. 108

a Adjust the air distribution
b Regulate the cabin temperature
c Air conditioning on/off
d Set the fan speed

NOTICE!

The function of the heating / air conditioning system may be affected!

– Always keep the air inlet slots on the cabin free of snow, foliage etc.
– Switch the air conditioning on every month for about ten minutes.

Heating the interior

1. Close all windows completely.
2. Adjust the desired air distribution.
3. Switch on the fan.
4. Regulate the cabin temperature.

Cooling the interior

1. Close all windows completely.
2. Adjust the desired air distribution.
3. Switch on the fan.
4. Switch the air conditioning on.
5. Regulate the cabin temperature.

Reducing the humidity

1. Direct the air distribution to the windscreen.
2. Switch the fan to stage “3”.
3. Set the cabin temperature to “Max”.
4. Switch the air conditioning on.

6.10 ECOSTOP

Optional equipment

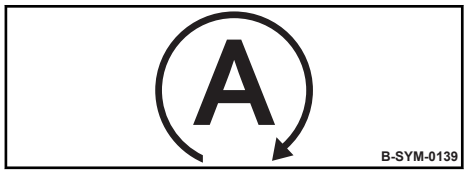

Fig. 109

In order to reduce the idle speed times of the machine, the engine is, under certain conditions, automatically shut down after an idle time of 10 minutes.

The ECOSTOP control light lights up.

Prerequisites for automatic shut-down of the engine:

- Travel lever in parking brake position
- Driver's seat not occupied
- Hydraulic oil temperature between 50 - 90 °C (122 - 194 °F) (as far as information is available)
- Coolant temperature between 60 - 90 °C (140 - 194 °F) (as far as information is available)
- Ambient temperature between 3 - 35 °C (37 - 95 °F) (as far as information is available)
- Engine idle speed
- Regeneration at standstill is not active (only on machines with exhaust gas aftertreatment system)

NOTICE!

The battery can become partly or fully discharged!

After the engine has been shut down, ignition and possibly other consuming devices (e.g. lighting) may still be switched on.

– If necessary, switch off consuming devices and ignition.

Starting the engine after ECOSTOP

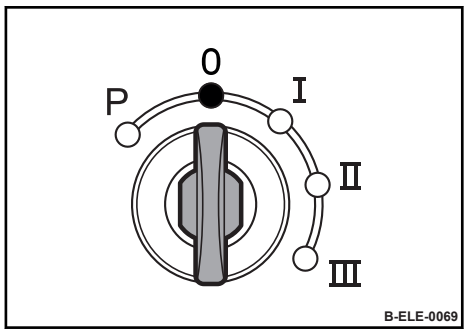

Fig. 110

1. Turn the ignition key to position “0”.
2. Start the engine *Chapter 6.3 ‘Starting the engine’ on page 114*.

6.11 Emergency procedures

6.11.1 Actuating the emergency stop switch

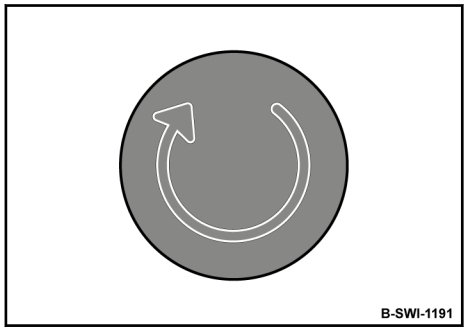

Fig. 111

1. In events of emergency and in case of danger actuate the emergency stop switch immediately.
   ⇨ The engine is shut down and the parking brake is closed.

6.11.2 Machine stops in case of faults



Fig. 112

If serious faults occur during operation, the control unit prevents further operation.

The machine is stopped and the parking brake is applied irrespective of the travel lever position (safe condition).

The central warning light flashes and the warning buzzer sounds.

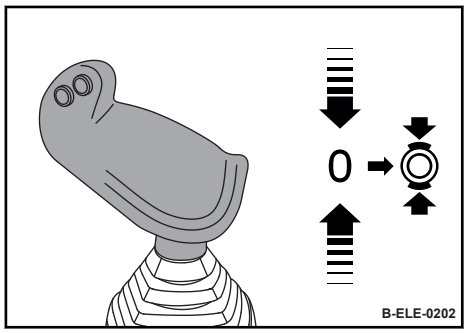

Fig. 113

1. Shift the travel lever to position “Middle” and engage it to the right.

NOTICE!

Danger of engine damage!

– Do not shut down the engine all of a sudden from full load speed, but let it idle for about two minutes.

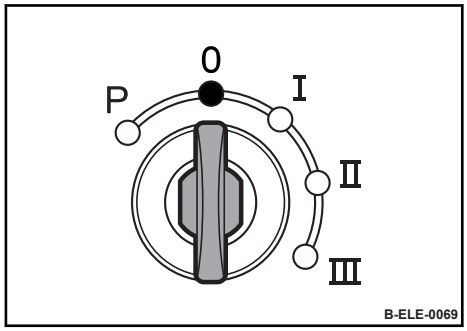

Fig. 114

2. Turn the ignition key to position “0” and pull it out.
3. Open and secure the engine hood ↬ *Chapter 8.2.1 ‘Open and secure the engine hood’ on page 152*.

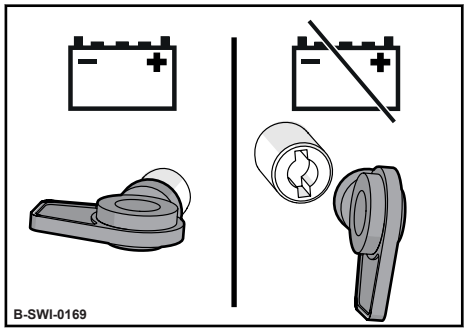

Fig. 115

4. Turn the main battery switch anticlockwise and pull it out.
5. Close the engine hood and lock it if necessary.
6. Inform our Customer Service.
7. Only operate the machine after it has been properly repaired.

6.11.3 Disconnecting the battery

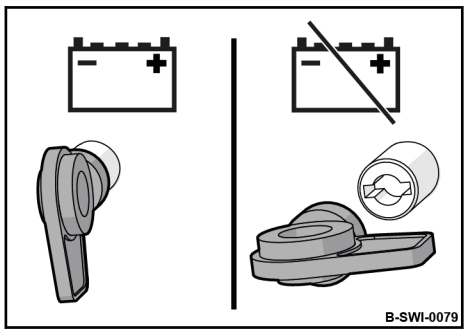

Fig. 116

1. In events of emergency, e.g. in case of a cable fire, disconnect the battery from the vehicle network. For this purpose turn the main battery switch anticlockwise and pull it out or pull the battery terminal off the battery.

6.11.4 Towing the machine

Tow the machine only in a case of emergency or to avoid an accident.

Towing distance max. 500 m (1600 ft), towing speed max. 1 km/h (55 ft/min).

Before towing make sure that:

- the tractor vehicle has sufficient traction and braking power for the unbraked towed load,
- lifting tackle is of sufficient strength to withstand the load and is fastened at the points provided for this purpose.

If no tow bar is used, towing is only permitted uphill.

Protective equipment:

- Working clothes
- Protective gloves

WARNING!
Danger of injury caused by uncontrolled machine movement!
– Always secure the machine against unintended rolling.

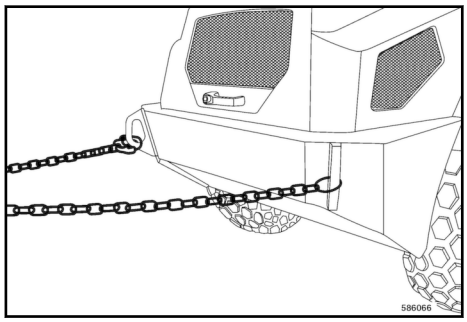

Fig. 117

1. Fasten the towing device reliably to the towing points.
2. Open the engine compartment hood and secure it.

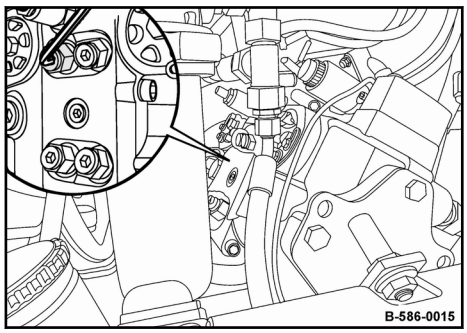

Fig. 118

3. Use a 6 mm Allen key to screw in the inner screw on all four high pressure relief valves clockwise to the end stop.

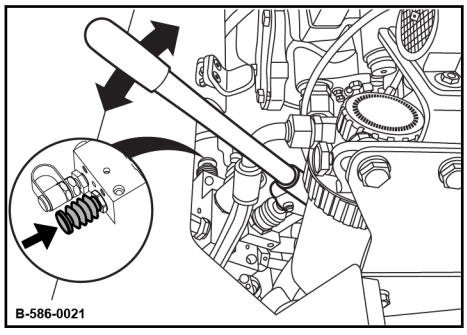

Fig. 119

4. Press the emergency operation button completely down.
5. Insert a suitable pump lever extension and operate the pump, until the parking brake is released.

   ⇨ The machine can now be towed.

6.11.5 After towing

WARNING!
Danger of injury caused by uncontrolled machine movement!
– Always secure the machine against unintended rolling.

1. After towing, park the machine in a safe place and secure it against accidental rolling away.
2. Use a 6 mm Allen key to unscrew the inner screw on all four high pressure relief valves anticlockwise to the end stop.

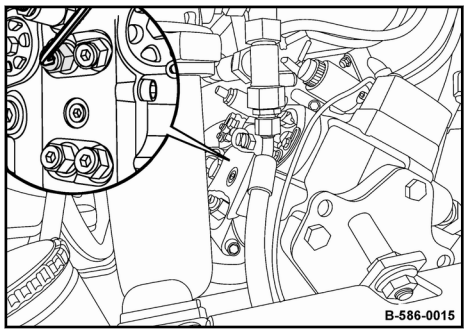

Fig. 120

3. Pull the emergency operation button up against the stop to activate the parking brake.

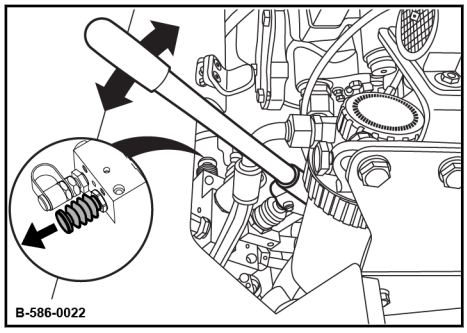

Fig. 121

After starting the engine the emergency operation button is pushed out by hydraulic pressure.

7 Loading / transporting the machine

7.1 Prepare for transport

1. Close all doors, windows and flaps.
2. Remove all loose objects from the machine or from the operator's stand or fasten them reliably.

7.2 Loading the machine

Use only stable loading ramps of sufficient load bearing capacity.

Loading ramps and transport vehicle must be free of grease, oil, snow and ice.

The ramp inclination must be less than the gradeability of the machine.

Make sure that any persons keep a safety distance of at least 2 metres while the machine is driven onto or down from the transport vehicle. The instructing person should not be inside the travel range of the machine.

Centre-of-gravity position

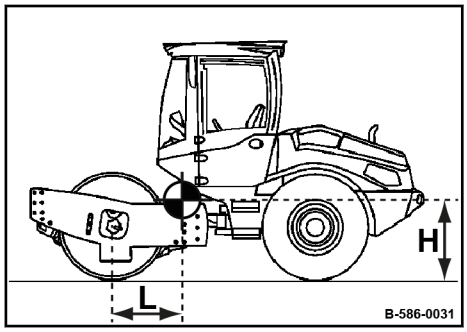

Fig. 122

Distance from middle of drum (mm)	Height (mm)
1163 ± 160	770 ± 70

DANGER!

Danger to life caused by the machine slipping or turning over!

– Make sure that no persons are in the danger zone.

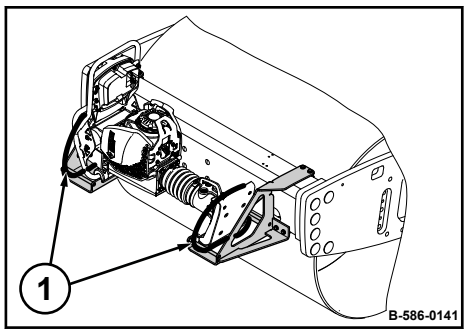

Fig. 123

1. Lash the tamper down with two lashing belts (1) using the transport brackets provided for this purpose.

   Use lashing belts with ratchet and a lashing capacity of ≥ 500 daN.

   Optional equipment

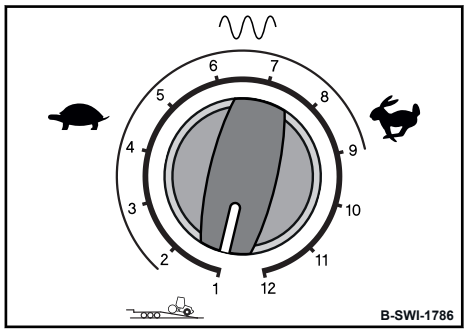

Fig. 124

2. Turn the rotary switch for travel range selection to position “Ramp”.
3. Drive the machine carefully onto the transport vehicle.
4. Observe the centre of gravity.
5. Switch off the engine and remove the ignition key.
6. Engage the articulation lock *Chapter 8.2.2.1 ‘Engaging the articulation lock’ on page 153*.

7.3 Lashing the machine to the transport vehicle

Do not use damaged or in any other way impaired lashing points.

Always use appropriate lifting and lashing means on the lifting and lashing points.

Use lifting and lashing gear only in the prescribed direction of load application.

Lifting tackle must not be damaged by machine components.

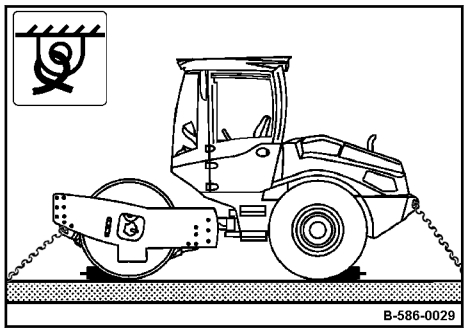

Fig. 125

1. Fasten the lashing tackle at the marked lashing points.
2. Lash the machine securely to the transport vehicle.

7.4 Loading by crane

Loads may only be attached and hoisted by an expert/qualified person.

Do not use lifting points that are damaged or impaired in any way.

Only use lifting tackle with sufficient load bearing capacity for the weight to be loaded. Minimum load bearing capacity of lifting gear: see max. operating weight ↳ *Chapter 2 'Technical data' on page 15*.

Always use appropriate lifting tackle at the lifting points.

Use lifting tackle only in the specified loading direction.

Lifting tackle must not be damaged by machine parts.

When lifting the machine avoid uncontrolled movements of the load. If necessary, hold the load steady with guide ropes.

1. Shut down the engine.

2. Engage the articulation lock ↳ *Chapter 8.2.2.1 'Engaging the articulation lock' on page 153*.

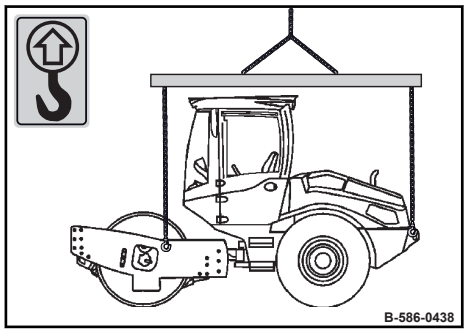

Fig. 126

3. Fasten the lashing tackle at the marked lifting points.

4. Use a suitable crossbar to prevent the machine from being damaged.

5. Adjust the length of the lifting tackle so that the crane hook is vertically above the centre of gravity of the machine.



DANGER!

Danger to life caused by suspended loads!

– Do not step or stand under suspended loads.

6. Lift the machine carefully and set down again at the intended location.

7.5 After transportation

Use only stable loading ramps of sufficient load bearing capacity.

Loading ramps and transport vehicle must be free of grease, oil, snow and ice.

The ramp inclination must be less than the gradeability of the machine.

Make sure that any persons keep a safety distance of at least 2 metres while the machine is driven onto or down from the transport vehicle. The instructing person should not be inside the travel range of the machine.

1. Loosen the articulation lock *Chapter 8.2.2.2 ‘Disengaging the articulation lock’ on page 154*.
2. Turn the rotary switch for travel range selection to position “Ramp”.
3. **DANGER!**
   Danger to life caused by the machine slipping or turning over!
   – Make sure that no persons are in the danger zone.

   Drive the machine carefully off the transport vehicle.

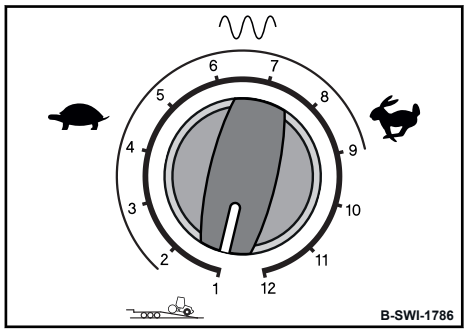

Fig. 127

8 Maintenance

8.1 Preliminary remarks and safety notes

DANGER!
Danger to life caused by an operationally unsafe machine!
- The machine must only be serviced by qualified and authorized personnel.
- Follow the safety regulations for maintenance work *Chapter 3.10 'Maintenance work' on page 53*.

WARNING!
Health hazard caused by fuels and lubricants!
- Safety regulations and environmental protection regulations must be followed when handling fuels and lubricants *Chapter 3.4 'Handling fuels and lubricants' on page 32*.

CAUTION!
Danger of being injured by the engine hood dropping down!
- Always secure an opened engine hood.

Wear your personal protective equipment.

Park the machine on horizontal, level, firm ground.

Keep unauthorised persons away from the machine.

Perform maintenance work only with the engine shut down.

Make sure that the engine cannot be accidentally started during maintenance work.

Do not touch hot components.

Thoroughly clean the machine and engine before starting maintenance work.

Before mounting the machine, check whether all access steps, grips and platforms are free of obstacles, grease, oils, fuel, dirt, snow and ice.

Use only the intended access steps and grips to mount the machine.

For overhead maintenance work use the access steps and working platforms provided or other secure means.

Do not step on machine parts which are not intended for this purpose.

Always attach the articulation lock when working in the area of the articulated joint.

Do not leave any tools or other objects, that could cause damage, in or on the machine.

After maintenance work has been completed, dispose of fuels and lubricants, filters, sealing elements and cleaning cloths in line with environmental regulations.

After maintenance work is completed reinstall all protective devices.

Close all maintenance flaps and doors after maintenance work has been completed.

The terms right/left are always in relation to the travel direction.

8.2 Preparations / concluding work

Certain maintenance tasks require preparations and concluding activities.

This includes e.g. opening and closing maintenance flaps and maintenance doors as well as securing certain components.

After this work close all maintenance flaps and doors again and return all components to their operating condition.

8.2.1 Open and secure the engine hood

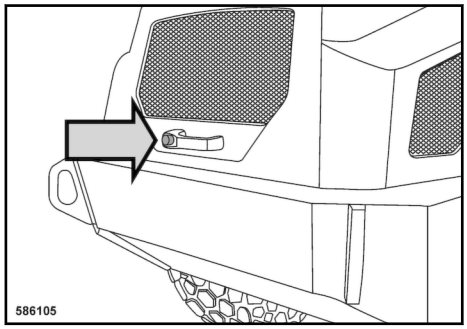

Fig. 128

1. Unlock the lock.
2. Press the button.
3. Push the hood to top position.

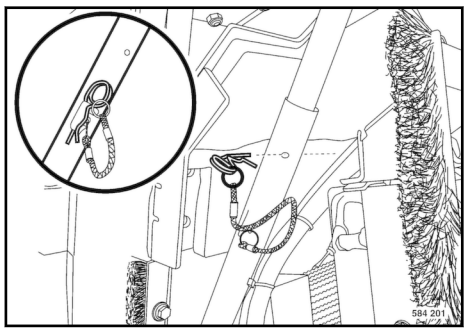

Fig. 129

4. Pull the spring pin out of the bracket.
5. Secure the hood in the protection tube with a split pin.

8.2.2 Engaging / releasing the articulation lock

8.2.2.1 Engaging the articulation lock

WARNING!
Danger of crushing by the articulating machine!
– Do not step into the articulation area of the machine while the engine is running.

1. Move the steering to middle position and stop the machine.
2. Shut down the engine, pull off the ignition key.
3. Pull the split pin out of the locking bolt for the articulation lock.
4. Remove the locking bolt.

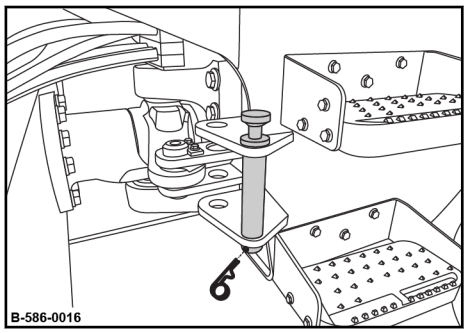

Fig. 130

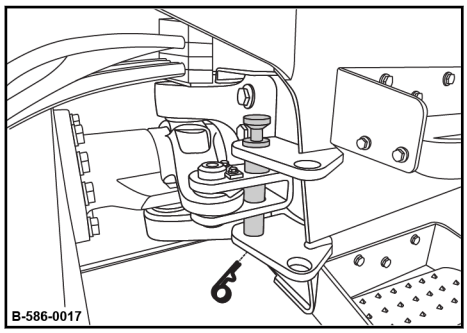

Fig. 131

5. Insert the locking bolt into the articulation lock and secure it with the split pin.

8.2.2.2 Disengaging the articulation lock

WARNING!
Danger of crushing by the articulating machine!
– Do not step into the articulation area of the machine while the engine is running.

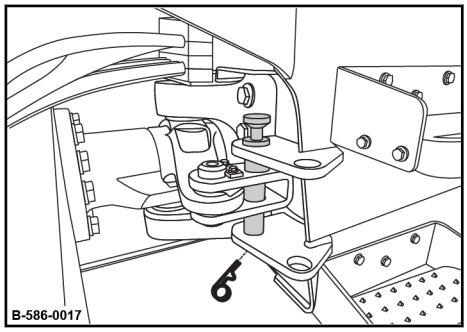

Fig. 132

1. Pull the split pin out of the locking bolt for the articulation lock.
2. Remove the locking bolt.

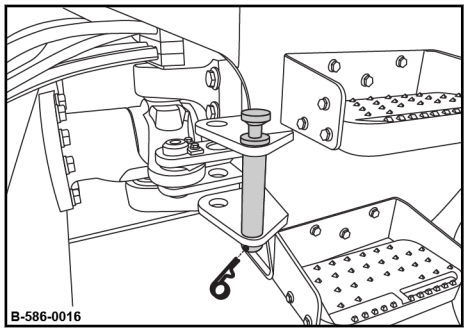

Fig. 133

3. Engage the articulation lock and secure it with the spring pin.

8.2.3 Removing / installing the protective covering of the belt drive

Protective equipment:

- Working clothes
- Protective gloves

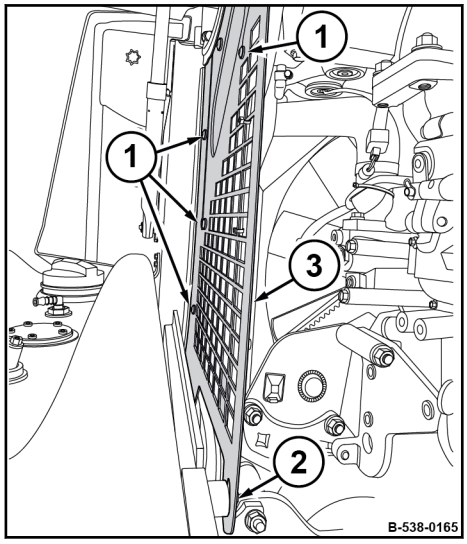

Fig. 134

1. Unscrew fastening screws (1, 2) and remove guard plate (3).
2. Perform the required maintenance work at the belt drive.
3. Reconnect the guard plate and tighten the fastening screws.

8.3 Fuels and lubricants

8.3.1 Engine oil

8.3.1.1 Oil quality

The following engine oil specifications are permitted:

- Engine oils according to API classification CF or higher.

Avoid mixing engine oils.

8.3.1.2 Oil viscosity

Since engine oil changes its viscosity with the temperature, the ambient temperature at the operating location of the engine is of utmost importance when choosing the viscosity class (SAE-class).

The temperature data of the SAE-class always refer to fresh oils. In travel operation engine oil ages because of soot and fuel residues. This adversely affects the properties of the engine oil, especially under low ambient temperatures.

Optimal operating conditions can be achieved by using the following oil viscosity chart as a reference:

Ambient temperature	Oil viscosity
higher than 25 °C (77 °F)	SAE 30 SAE 10W-30 SAE 15W-40
-10 °C to 25 °C (14 °F to 77 °F)	SAE 10W-30 SAE 15W-40
below - 10 °C (14 °F)	SAE 10W-30

8.3.1.3 Oil change intervals

If the oil change intervals are not reached over a period of one year, the oil change should be performed at least 1 x per year, irrespective of the operating hours reached.

8.3.2 Fuel

8.3.2.1 Fuel quality

We recommend using a diesel fuel with a sulphur content of less than 0.1 %.

When using a diesel fuel with a high sulphur content of 0.5 % to 1.0 % the oil change intervals must be halved.

Fuels with a sulphur content of more than 1.0 % are not permitted.

In order to fulfil national emission regulations one must strictly use the legally required fuels (e.g. sulphur content).

The recommended Cetan index number is 45. A Cetan index number higher than 50 should preferably be used, especially at ambient temperatures below -20 °C (-4 °F) and when working at altitudes of more than 1500 m (4921 ft).

The following fuel specifications are recommended:

- EN 590
- ASTM D975 Grade-No. 1-D and 2-D

8.3.2.2 Winter fuel

For winter operation use only winter diesel fuel, to avoid clogging because of paraffin separation.

At very low temperatures disturbing paraffin separation can also be expected when using winter diesel fuel.

Diesel fuels suitable for temperatures down to -44 °C (-47 °F) are available for Arctic climates.

NOTICE!

Danger of engine damage!

– The admixture of petroleum and the addition of “flow enhancing additives” (fuel additives) is not permitted.

8.3.2.3 Storage

Even traces of zinc, lead and copper can cause deposits in the injection nozzles, especially in modern Common-Rail injection systems.

Zinc and lead coatings in refuelling systems and fuel lines are not permitted.

Copper containing materials (copper lines, brass items) should be avoided, because they can cause catalytic reactions in the fuel with subsequent depositing in the injection system.

8.3.3 Coolant

Always use a mixture of anti-freeze agent and clean, dehardened water with a mixing ratio of 1:1.

Under particularly extreme temperature conditions you should consult our customer service concerning the anti-freeze agent to be used.

There are various types of anti-freeze agents available. For this engine you should use ethylene glycol.

Before filling in the coolant mixed with anti-freeze agent the radiator must be flushed with clean water. This procedure should be repeated two to three times to clean the inside of radiator and engine block.

NOTICE!

Danger of engine damage!

– Do not mix different coolants and additives of any other kind.

Mixing the coolant:

- Prepare a mixture of 50% anti-freeze agent and 50% low mineral, clean water.
- Stir well before filling it into the radiator.
- The method of mixing water and anti-freeze depends on the brand of the anti-freeze agent (see standard SAE J1034 and also standard SAE J814c).

Add anti-freeze agent:

- If the coolant level drops because of evaporation,only clean water is to be used for topping up.
- In case of leakages you must always fill in anti-freeze agents of the same brand and the same mixing ratio.

Do not use any radiator cleaning agent after the anti-freeze agent has been mixed in. The anti-freeze agent also contains a corrosion protection agent. If this mixes with cleaning agent it may cause the development of sludge, which could damage the cooling system.

Anti-freeze concentration	Freezing point
50 %	-37 °C (-35 °F)

8.3.4 Hydraulic oil

8.3.4.1 Mineral oil based hydraulic oil

The hydraulic system is operated with hydraulic oil HV 46 (ISO) with a kinematic viscosity of 46 mm^2/s at 40 °C (104 °F) and 8 mm^2/s at 100 °C (212 °F).

When refilling or changing oil, use only hydraulic oil type HVLP according to DIN 51524, part 3, or hydraulic oil type HV according to ISO 6743/4.

The viscosity index must be at least 150 (observe information of manufacturer).

8.3.4.2 Bio-degradable hydraulic oil

The hydraulic system can also be operated with a synthetic ester based biodegradable hydraulic oil.

The biodegradable hydraulic oil Panolin HLP Synth. 46 or Plantohyd 46 S meets all the requirements of a mineral oil based hydraulic oil according to DIN 51524.

In hydraulic systems filled with biodegradable hydraulic oil, always use the same oil to top up and do not mix oil types.

When changing from mineral oil based hydraulic oil to an ester based biologically degradable hydraulic oil, you should consult the lubrication oil service of the oil manufacturer, or our customer service for details.

NOTICE!

Danger of damage to the hydraulic system!

- After the changeover check the hydraulic oil filters increasingly for contamination.
- Have regular oil analyses performed regarding the water content and mineral oil.
- Replace the hydraulic oil filter at the latest after 500 operating hours.

8.3.5 Gear oil SAE 75W-90

Use a fully synthetic gear oil in accordance with SAE 75W-90, API GL5 with a kinematic viscosity of at least 16 mm^2/s at 100 °C (212 °F).

8.3.6 Gear oil SAE 80W-140

Use a fully synthetic gear oil in accordance with SAE 80W-140, API GL5 with a kinematic viscosity of at least 20 mm^2/s at 100 °C (212 °F).

It is a hypoid lubricant of highest quality class for transmissions under extreme strain.

8.4 List of fuels and lubricants

Assembly group	Fuel or lubricant		Spare parts number	Filling quantity
	Summer	Winter		Observe the level mark!
Engine oil	SAE 10W-40 Specification: ↳ *Chapter 8.3.1 'Engine oil' on page 156*		009 920 06 20 l	11 l (2.8 gal us)
	SAE 15W-40			
	SAE 10W-30			
	SAE 30	SAE 10W		
Fuel	Diesel	Winter diesel fuel		110 l (29 gal us)
	Specification: ↳ *Chapter 8.3.2 'Fuel' on page 157*			
Coolant	Mixture of water and anti-freeze agent Specification: ↳ *Chapter 8.3.3 'Coolant' on page 158*		009 940 03 20 l	13 l (3.4 gal us)
Hydraulic system	Hydraulic oil (ISO), HVLP 46 Specification: ↳ *Chapter 8.3.4.1 'Mineral oil based hydraulic oil' on page 160*		009 930 09 20 l	60 l (16 gal us)
	or ester based biodegradable hydraulic oil Specification: ↳ *Chapter 8.3.4.2 'Bio-degradable hydraulic oil' on page 160*			
Exciter housing	Gear oil SAE 75W-90 Specification: ↳ *Chapter 8.3.5 'Gear oil SAE 75W-90' on page 161*		009 925 05 20 l	2.5 l (0.66 gal us)

Assembly group	Fuel or lubricant		Spare parts number	Filling quantity
	Summer	Winter		Observe the level mark!
Drum drive reduction gear	Gear oil SAE 80W-140 Specification: *Chapter 8.3.6 'Gear oil SAE 80W-140' on page 161*		009 925 07 20 l	2.5 l (0.66 gal us)
Drive axle	Gear oil SAE 80W-140 Specification: *Chapter 8.3.6 'Gear oil SAE 80W-140' on page 161*		009 925 07 20 l	7.5 l (2.0 gal us)
Wheel hubs	Gear oil SAE 80W-140 Specification: *Chapter 8.3.6 'Gear oil SAE 80W-140' on page 161*		009 925 07 20 l	0.7 l each (0.18 gal us)
Tyres	Water + calcium chloride			150 l + 63 kg (39.6 gal us + 139 lbs)
	or water + magnesium chloride			166 l + 47 kg (40.9 gal us + 104 lbs)
Air conditioning	Refrigerant R134a			1300 g (2.9 lbs)

8.5 Running-in instructions

8.5.1 General

The following maintenance work must be performed when running in new machines or overhauled engines.

NOTICE!

Danger of engine damage!

– Up to approx. 250 operating hours check the engine oil level twice every day.

Depending on the load the engine is subjected to, the oil consumption will drop to the normal level after approx. 100 to 250 operating hours.

8.5.2 After 50 operating hours

1. Check the belt tension *Chapter 8.7.4 'Service the belt drive' on page 171*.

8.5.3 After 250 operating hours

1. Tighten all bolted connections on air intake, exhaust, oil sump and engine mounts
2. Retighten the bolted connections on the machine.
3. Retighten the wheel nuts *Chapter 8.9.9 'Retightening the wheel nuts' on page 207*.
4. Oil and filter change diesel engine *Chapter 8.8.1 'Change engine oil and oil filter cartridge' on page 182*.
5. Oil change in drive axle *Chapter 8.9.4 'Change the oil in the drive axle' on page 200*.

6. Oil change in wheel hub ↳ *Chapter 8.9.5 ‘Changing the oil in the wheel hubs’ on page 202*.
7. Exciter unit oil change ↳ *Chapter 8.9.6 ‘Change the oil in the exciter housing’ on page 203*.
8. Oil change, drum drive reduction gear ↳ *Chapter 8.9.7 ‘Change the oil in the drum drive reduction gear’ on page 205*.

8.5.4 After 500 operating hours

1. Oil and filter change on diesel engine ↳ *Chapter 8.8.1 ‘Change engine oil and oil filter cartridge’ on page 182*.
2. Exciter unit oil change. ↳ *Chapter 8.9.6 ‘Change the oil in the exciter housing’ on page 203*
3. Oil change, drum drive reduction gear ↳ *Chapter 8.9.7 ‘Change the oil in the drum drive reduction gear’ on page 205*.

8.5.5 After 1000 operating hours

1. Oil change in drive axle ↳ *Chapter 8.9.4 ‘Change the oil in the drive axle’ on page 200*.
2. Oil change in wheel hub ↳ *Chapter 8.9.5 ‘Changing the oil in the wheel hubs’ on page 202*.
3. Exciter unit oil change ↳ *Chapter 8.9.6 ‘Change the oil in the exciter housing’ on page 203*.
4. Oil change, drum drive reduction gear ↳ *Chapter 8.9.7 ‘Change the oil in the drum drive reduction gear’ on page 205*.

5. Retighten the wheel nuts ↬ *Chapter 8.9.9 ‘Retightening the wheel nuts’ on page 207*.

8.6 Maintenance Table

No.	Maintenance works	Page
	Every 250 operating hours	
8.7.1	*Checking the rubber buffers*	*169*
8.7.2	*Check the air intake lines*	*170*
8.7.3	*Checking radiator hoses and hose clamps*	*171*
8.7.4	*Service the belt drive*	*171*
8.7.5	*Cleaning the radiator module*	*174*
8.7.6	*Checking the oil level in the drive axle*	*176*
8.7.7	*Checking the oil level in the wheel hubs*	*176*
8.7.8	*Checking the oil level in the exciter housing*	*177*
8.7.9	*Checking the oil level in the drum drive reduction gear*	*179*
8.7.10	*Changing the fresh air filter in the cabin*	*180*
8.7.11	*Check the parking brake*	*181*
	Every 500 operating hours	
8.8.1	*Change engine oil and oil filter cartridge*	*182*
8.8.2	*Replacing the fuel filter, bleeding the fuel system*	*184*
8.8.3	*Replacing the V-belt*	*186*
8.8.4	*Checking the anti-freeze concentration and the condition of the coolant*	*188*
8.8.5	*Checking the hydraulic lines*	*189*
8.8.6	*Servicing the battery, checking the battery isolation*	*190*
8.8.7	*Servicing the air conditioning system*	*191*
	Every 1000 operating hours	
8.9.1	*Adjusting the valve clearance*	*194*
8.9.2	*Checking the engine mounts*	*197*
8.9.3	*Replacing the hydraulic oil filter*	*197*
8.9.4	*Change the oil in the drive axle*	*200*
8.9.5	*Changing the oil in the wheel hubs*	*202*

No.	Maintenance works	Page
8.9.6	*Change the oil in the exciter housing*	*203*
8.9.7	*Change the oil in the drum drive reduction gear*	*205*
8.9.8	*Retightening the fastening of the axle on the frame*	*206*
8.9.9	*Retightening the wheel nuts*	*207*
8.9.10	*Checking the ROPS*	*207*
8.9.11	*Checking the travel lever control*	*208*
8.9.12	*Cleaning the circulation air filter of the heating*	*208*
	Every 2000 operating hours	
8.10.1	*Changing the hydraulic oil*	*209*
8.10.2	*Changing the coolant*	*211*
8.10.3	*Replacing the fuel lines*	*214*
8.10.4	*Replacing injection nozzles*	*214*
	Every 3000 operating hours	
8.11.1	*Checking the turbo charger*	*215*
8.11.2	*Checking the fuel injection pump*	*215*
	As required	
8.12.1	*Air filter maintenance*	*216*
8.12.2	*Checking and cleaning the water separator*	*219*
8.12.3	*Adjusting the scrapers*	*221*
8.12.4	*Cleaning the machine*	*222*
8.12.5	*Filling the windscreen washer tank*	*223*
8.12.6	*Replacing the paper roll in the printer*	*223*
8.12.7	*Drain the fuel tank sludge*	*224*
8.12.8	*Measures prior to extended shut-down period*	*224*

8.7 Every 250 operating hours

8.7.1 Checking the rubber buffers

Protective equipment:

- Working clothes
- Safety shoes
- Protective gloves

1. Drive the machine onto horizontal, level, firm ground.

   Make sure there is sufficient space to drive the machine for at least one full turn of the drum.

2. Shut down the engine.

Checking the left rubber buffers

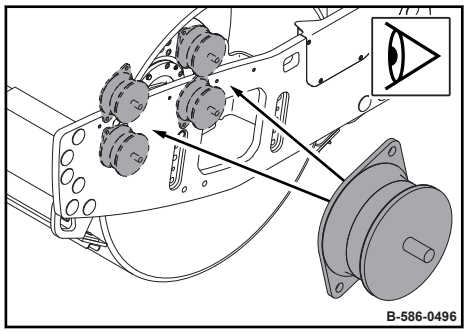

Fig. 135

3. Check the rubber buffers on the left-hand side for a tight fit, cracks and tear-offs.
4. Have any damaged rubber buffers replaced immediately by our Customer Service Department.

Checking the right rubber buffers

To check the rubber buffers on the right-hand side, the drum has to be moved one revolution in three steps.

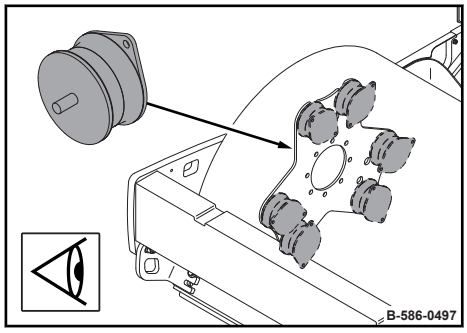

Fig. 136

5. Check the rubber buffers that are visible for a tight fit, cracks and tear-offs.

   Then start the engine and move the machine forward approx. 1.50 m (5 ft).

   Shut the engine down and perform the check once again.
6. Repeat these activities until the drum has been moved one revolution.
7. Have any damaged rubber buffers replaced immediately by our Customer Service Department.

8.7.2 Check the air intake lines

Protective equipment:
- Working clothes
- Protective gloves

1. Park the machine in secured condition *Chapter 6.8 'Parking the machine in secured condition' on page 131*.
2. Allow the engine to cool down.
3. Check the condition and tight fit of all air intake lines and hose clamps.
4. If fuel lines or hose clamps are found to be damaged, the corresponding parts must be immediately replaced.

8.7.3 Checking radiator hoses and hose clamps

Protective equipment:
- Working clothes
- Protective gloves

1. Park the machine in secured condition ↳ *Chapter 6.8 'Parking the machine in secured condition' on page 131*.
2. Allow the engine to cool down.
3. Check the condition and tight fit of all radiator hoses and hose clamps.
4. If a radiator hose is swollen, hardened or cracked, both hose and hose clamp must be replaced immediately.

8.7.4 Service the belt drive

Belt tension nominal value	
during initial assembly (new belt)	400 N (90 lbf) (cold)
after a running-in time, in the case of reassembly	300 N (67 lbf)

Preparatory measures

Protective equipment:
- Working clothes
- Protective gloves

1. Park the machine in secured condition ↳ *Chapter 6.8 'Parking the machine in secured condition' on page 131*.
2. Allow the engine to cool down.
3. Remove the protective covering of the belt drive ↳ *Chapter 8.2.3 'Removing / installing the protective covering of the belt drive' on page 155*.

Checking the condition of the V-belt

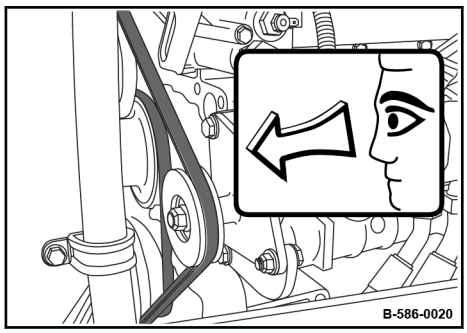

Fig. 137

1. Inspect the entire circumference of the V-belt visually for damage and cracks.
2. Replace damaged or cracked belts ↳ *Chapter 8.8.3 'Replacing the V-belt' on page 186*.

Checking the V-belt tension

Tool: ■ Belt tension tester

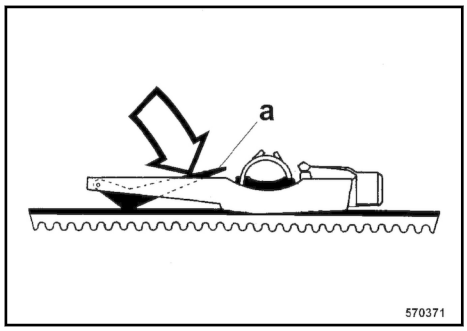

Fig. 138

1. Press the indicator arm (a) of the tester into the gap of the measuring scale.
2. Place the meter in the middle between the V-belt pulleys on the back of the belt.

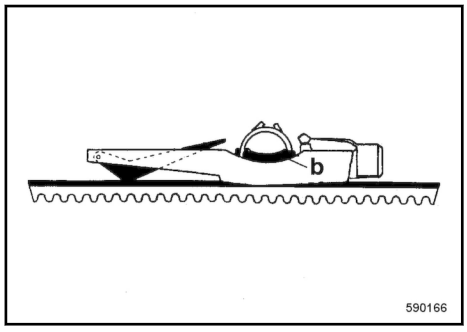

Fig. 139

3. Actuate the push button (b) evenly with a finger under a right angle to the belt, until the pressure spring disengages audibly and noticeably.

   ⇨ The indicator arm remains in the measured position.
4. Take the measuring unit carefully off, without moving the indicating arm.

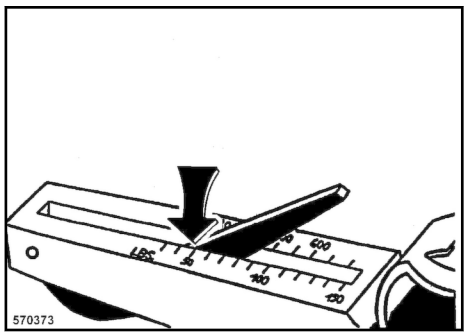

Fig. 140

5. Read the belt tension where the upper edge of the indicating arm intersects with the measuring scale.
6. Tighten the belt, if necessary.

Tensioning the V-belts for fan and air conditioning compressor

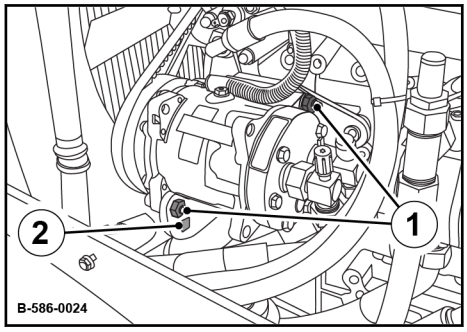

Fig. 141

1. Loosen fastening screws (1).
2. Tension the V-belt with the tensioning device (2), until the correct tension is reached.
3. Tighten the fastening screws again.

Tensioning the generator V-belt

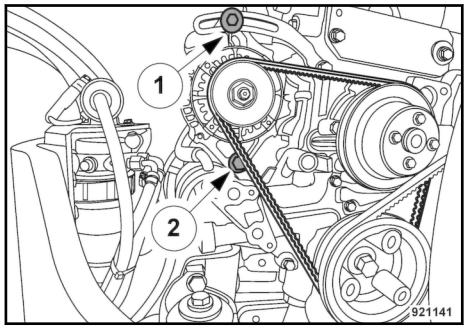

Fig. 142

1. Loosen the tensioning screw (1) and the screw (2) on the generator.
2. Tension the belt to the specified value.
3. Retighten clamping screw (1) and screw (2).

Concluding measures

1. Install the protective covering of the belt drive ↬ *Chapter 8.2.3 ‘Removing / installing the protective covering of the belt drive’ on page 155*.

8.7.5 Cleaning the radiator module

NOTICE!
Components may get damaged!
- Dirt on fan blades and oil coolers reduce the cooling effect. Dirt deposits in these areas are substantially supported by oil and fuel on these surfaces. For this reason you should always seal any oil or fuel leaks in the vicinity of the cooling fan or the radiator and clean the cooling fins after.
- Do not damage any cooling fins on the cooler core when cleaning.

Cleaning with compressed air

Protective equipment:
- Working clothes
- Safety shoes
- Protective gloves
- Safety goggles

1. Park the machine safely *Chapter 6.8 'Parking the machine in secured condition' on page 131*.
2. Allow the engine to cool down.
3. Remove the air scoop from both sides.

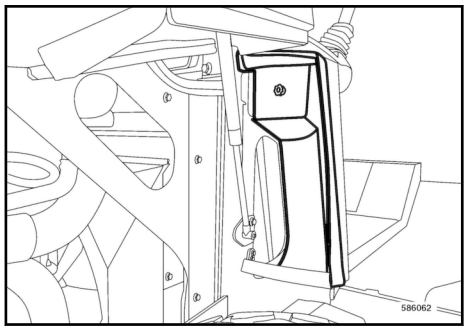

Fig. 143

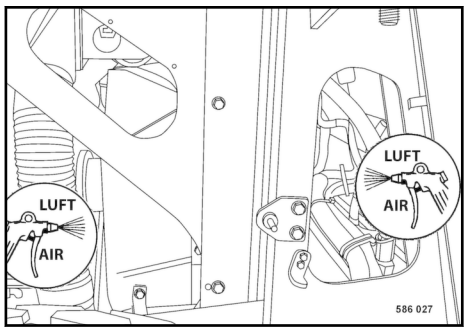

Fig. 144

4. **CAUTION!**
   Danger of eye injuries caused by particles flying around!
   – Wear your personal protective equipment (safety gloves, protective working clothes, goggles).

   Blow the radiator out with compressed air from the air discharge side.
5. Blow the radiator out with compressed air from the air supply side.

Cleaning with cold cleansing agent

Protective equipment:

- Working clothes
- Safety shoes
- Protective gloves

NOTICE!
Electric components can be damaged by water entering into the system!
– Protect electrical equipment such as generator, regulator and starter against the direct water jet.

1. Spray engine and radiator with a suitable cleansing agent, e.g. cold cleansing agent, let it soak in for a while and spray it off with a strong water jet.
2. Warm up the engine for a while to avoid corrosion.

8.7.6 Checking the oil level in the drive axle

NOTICE!
Components may get damaged!
– Use only gear oil of the permitted specification ↳ *Chapter 8.3.6 'Gear oil SAE 80W-140' on page 161*.

Protective equipment:
- Working clothes
- Protective gloves

1. Park the machine in secured condition ↳ *Chapter 6.8 'Parking the machine in secured condition' on page 131*.
2. Clean the area around the oil level inspection plug and unscrew the plug.

   A second oil level inspection plug is located on the opposite side.
3. The oil level must reach the bottom edge of the bore, top up oil if necessary.
4. Turn the oil level inspection plug tightly back in.

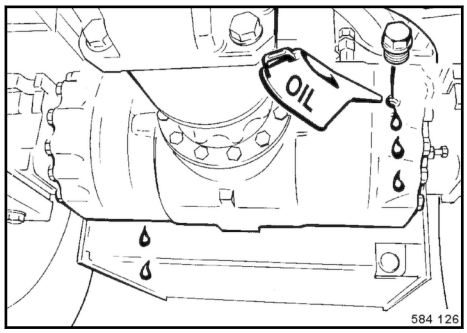

Fig. 145

8.7.7 Checking the oil level in the wheel hubs

NOTICE!
Components may get damaged!
– Use only gear oil of the permitted specification ↳ *Chapter 8.3.6 'Gear oil SAE 80W-140' on page 161*.

Protective equipment:
- Working clothes
- Protective gloves

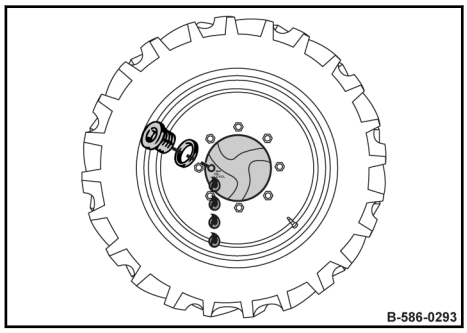

Fig. 146

1. Move the machine until the oil level inspection plug is in horizontal position.
2. Park the machine in secured condition ↬ *Chapter 6.8 'Parking the machine in secured condition' on page 131*.
3. Clean the area around the oil level inspection plug.
4. Unscrew the oil level inspection plug.
   ⇨ The oil level must reach the bottom edge of the level bore.
5. Top up oil if necessary.
6. Turn the oil level inspection plug tightly back in.
7. Change the oil in both wheel hubs.

8.7.8 Checking the oil level in the exciter housing

NOTICE!

Components may get damaged!

– Use only gear oil of the permitted specification ↬ *Chapter 8.3.5 'Gear oil SAE 75W-90' on page 161*.

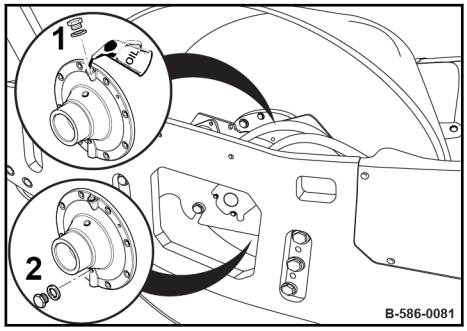

Fig. 147

Protective equipment:

- Working clothes
- Protective gloves

1. Before checking the oil level, run the machine warm with vibration for about 1/2 hour.
2. Move the drum, until the oil level inspection plug (2) is in bottom position.
3. Park the machine in secured condition ↬ *Chapter 6.8 'Parking the machine in secured condition' on page 131*.

WARNING!
Danger of burning on hot components!
– Wear your personal protective equipment (protective gloves, protective clothing).
– Avoid touching hot components.

4. Clean the area around the oil level inspection plug and the filler plug (1).
5. Unscrew the oil level inspection plug.
   ⇨ The oil level must reach the bottom edge of the level bore.
6. Unscrew the oil filler plug and fill in some oil through the oil filler bore, until oil starts to drip out through the inspection bore.
7. Retighten the filler and level inspection plugs.
8. Repeat this inspection on the opposite side.
9. If a loss of oil is found, perform trouble-shooting, repair the drum if necessary.

8.7.9 Checking the oil level in the drum drive reduction gear

NOTICE!
Components may get damaged!
– Use only gear oil of the permitted specification ↳ *Chapter 8.3.6 'Gear oil SAE 80W-140' on page 161*.

Protective equipment:
- Working clothes
- Protective gloves

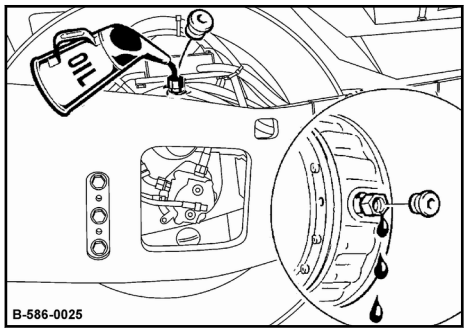

Fig. 148

1. Move the machine until the oil level inspection plug is in horizontal and the filler plug is in top position.
2. Park the machine in secured condition ↳ *Chapter 6.8 'Parking the machine in secured condition' on page 131*.
3. Clean the area around the oil level inspection plug and unscrew the plug.
   ⇨ The oil level must reach the bottom edge of the level bore.
4. For topping up, clean the area around the filler plug.
5. Unscrew the filler plug.
6. Fill in oil, until it reaches the bottom edge of the inspection bore.
7. Retighten the oil level inspection and filler plug.

8.7.10 Changing the fresh air filter in the cabin

Protective equipment:
- Working clothes
- Protective gloves

1. Park the machine in secured condition ↳ *Chapter 6.8 'Parking the machine in secured condition' on page 131*.

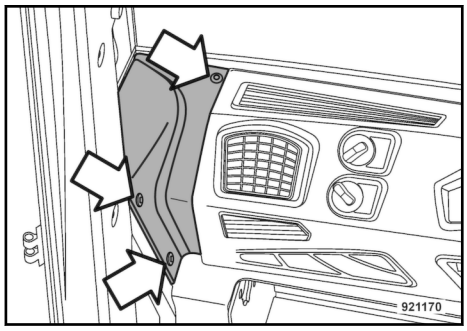

Fig. 149

2. Pull the fastening pins out of the left cover and remove the cover.

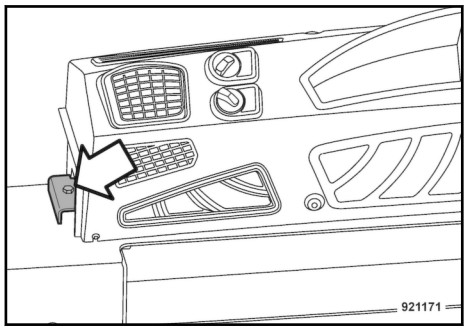

Fig. 150

3. Loosen the fastening screw.
4. Also remove the cover from the right hand side and loosen the fastening screw.

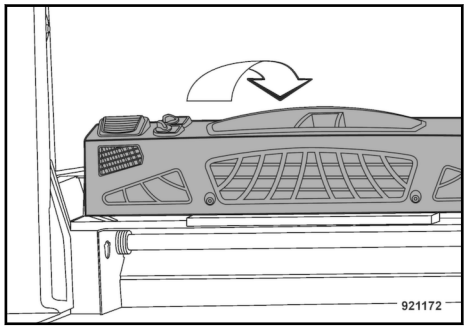

Fig. 151

5. Tilt the console towards the front screen and hold it.

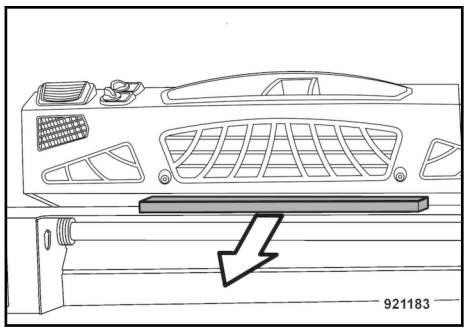

Fig. 152

6. Take out the filter.
7. Insert the new filter and fold the console down again.
8. Tighten the left and right fastening screws and reinstall the covers.

8.7.11 Check the parking brake

This work must only be performed by authorized service personnel.

8.8 Every 500 operating hours

8.8.1 Change engine oil and oil filter cartridge

Perform this maintenance work at the latest after one year.

NOTICE!

Danger of engine damage!

- Change the oil only with the engine at operating temperature.
- Use only oil of the permitted specification *Chapter 8.3.1 ‘Engine oil’ on page 156*.
- Filling quantity: *Chapter 8.4 ‘List of fuels and lubricants’ on page 162*

Protective equipment:

- Working clothes
- Safety shoes
- Protective gloves

1. Park the machine safely *Chapter 6.8 'Parking the machine in secured condition' on page 131*.

WARNING!

Danger of burning on hot components!

– Wear your personal protective equipment (protective gloves, protective clothing).
– Avoid touching hot components.

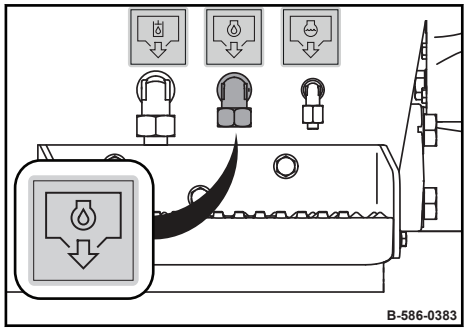

Fig. 153

2. Unscrew the drain plug and collect any oil running out.
3. Screw the drain plug back in tightly.

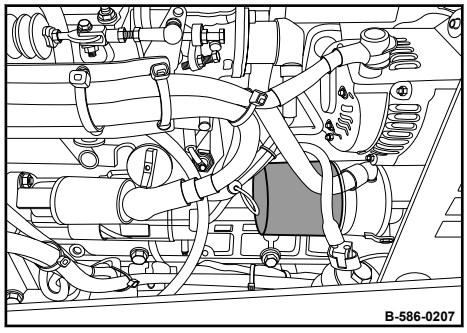

Fig. 154

4. Thoroughly clean the outside of the oil filter cartridge.
5. Unscrew the oil filter cartridge using an appropriate strap wrench.
6. Remove any dirt from the sealing face of the filter carrier.
7. Thinly apply oil to the rubber seal of the new oil filter cartridge.
8. Screw on the new oil filter cartridge tightly by hand.

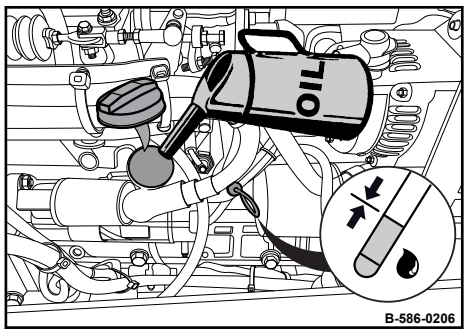

Fig. 155

9. Fill with new engine oil.
10. After a short test run check the oil level on the dipstick; if necessary, top up to the top dipstick mark.
11. Check oil filter cartridge and drain plug for leaks.
12. Dispose of the oil and filters in line with environmental regulations.

8.8.2 Replacing the fuel filter, bleeding the fuel system

8.8.2.1 Preliminary remarks

NOTICE!

Danger of engine damage!

- Ensure strict cleanliness! Thoroughly clean the area around the fuel filters.
- Air in the fuel system causes irregular running of the engine, a drop in engine power, stalls the engine and makes starting impossible.
- After work on the fuel system bleed the system, perform a test run and check for leaks.
- Additional bleeding of the fuel system by a 5 minute test run in idle speed or low load is mandatory.

1. Park the machine in secured condition ↳ *Chapter 6.8 ‘Parking the machine in secured condition’ on page 131*.

8.8.2.2 Replacing the fuel filter and the fuel pre-cleaner

Perform this maintenance work at the latest after one year.

Protective equipment:
- Working clothes
- Protective gloves

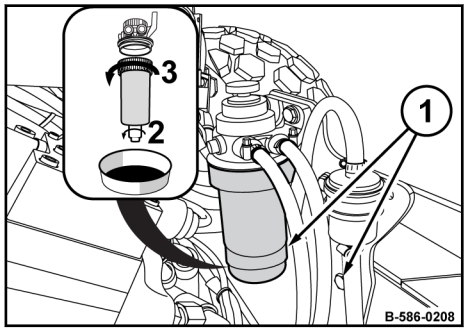

Fig. 156

1. Slightly loosen the fastening screws (1) and pull the bracket carefully up.
2. Tighten the fastening screws again.
3. Pull the plug off the sensor on the water separator.
4. Place a collecting vessel under the drain bore.
5. Unscrew the drain plug (2) and catch running out fuel.
6. Open the quick lock (3) and take off the fuel pre-filter.
7. Clean the sealing face on the filter carrier from any dirt.

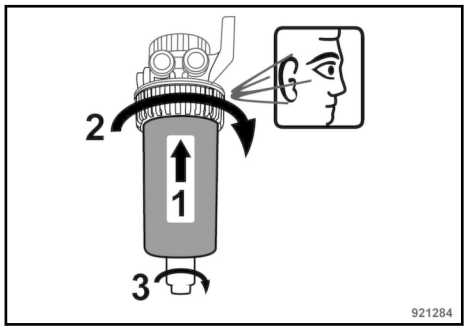

Fig. 157

8. **NOTICE!**
   Danger of engine damage!
   – Never fill filters beforehand, to avoid the entry of dirt into the clean side.

   Slightly oil the rubber seal on the new fuel pre-filter element.
9. Close the quick lock (2) so that is engages noticeably.
10. Screw in drain plug (3).
11. Push the plug on to the sensor on the water separator.

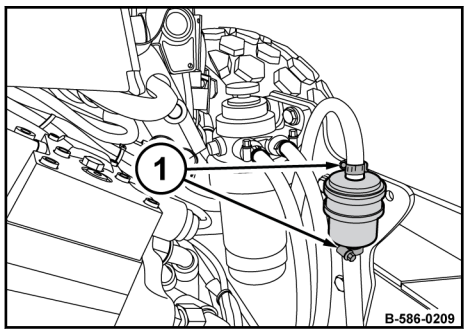

Fig. 158

12. Loosen the hose clamps (1) on the fuel pre-filter.

13. Pull the fuel hoses off the fuel pre-filter.

14. Install the new fuel pre-filter and observe the flow direction (arrow).

15. Push the filter bracket down and tighten the screws.

16. Dispose of fuel and filter environmentally.

8.8.2.3 Bleeding the fuel system

Protective equipment:

- Working clothes
- Protective gloves

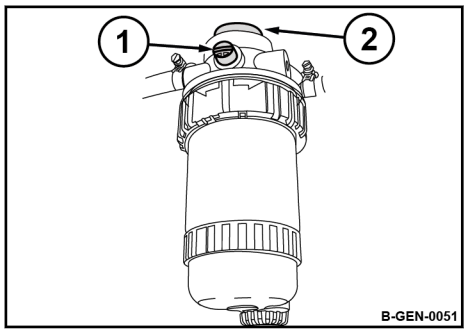

Fig. 159

1. Open the bleeding screw (1) for one turn.

2. Operate the fuel hand pump (2) manually, until fuel flows out of the loosened bleeding screw without air bubbles.

3. Tighten the bleeding screw.

4. Check the fuel filters for leaks after a short test run.

8.8.3 Replacing the V-belt

Perform this maintenance work at the latest after two years.

Preparatory measures

Protective equipment:
- Working clothes
- Protective gloves

1. Park the machine in secured condition ↳ *Chapter 6.8 'Parking the machine in secured condition' on page 131*.
2. Allow the engine to cool down.
3. Remove the protective covering of the belt drive ↳ *Chapter 8.2.3 'Removing / installing the protective covering of the belt drive' on page 155*.

Replacing the V-belt

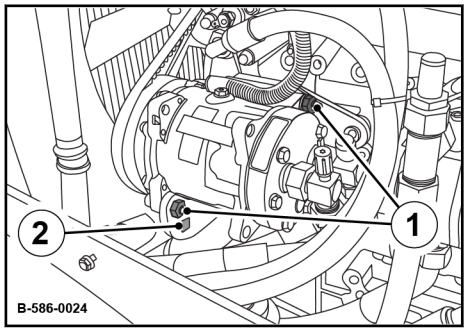

Fig. 160

1. Loosen fastening screws (1).
2. Slacken the V-belt by the tensioning device (2), so that the V-belt can be taken off.
3. Take the V-belt off.

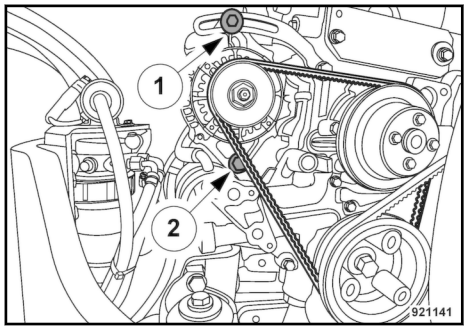

Fig. 161

4. Loosen tensioning screw (1) and screw (2) on the generator.
5. Relieve and remove the V-belt.
6. Put the new V-belt into place at the generator.
7. Tighten the V-belt to the specified value.
8. Retighten clamping screw (1) and screw (2).

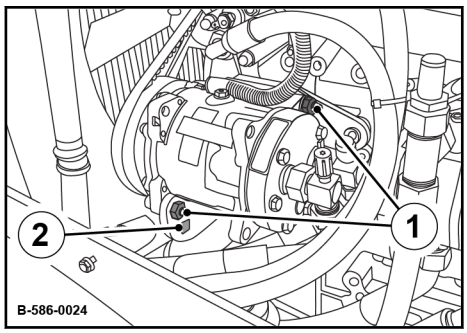

Fig. 162

9. Put the new V-belt into place at the air conditioning compressor.
10. Tighten the V-belt with tensioning device (2), until the correct tension is reached.
11. Retighten the fastening screws.

Concluding measures

1. Install the protective covering of the belt drive ↳ *Chapter 8.2.3 'Removing / installing the protective covering of the belt drive' on page 155*.

8.8.4 Checking the anti-freeze concentration and the condition of the coolant

Protective equipment:

- Working clothes
- Safety shoes
- Protective gloves
- Safety goggles

1. Park the machine safely ↳ *Chapter 6.8 'Parking the machine in secured condition' on page 131*.
2. Allow the engine to cool down.
3. Unscrew the cap and check the anti-freeze concentration with a conventional tester.
4. Check the condition of the coolant.
5. Thoroughly flush the cooling system if the coolant is contaminated by corrosion residues or other suspended matter ↳ *Chapter 8.10.2 'Changing the coolant' on page 211*.
6. Close the cap.

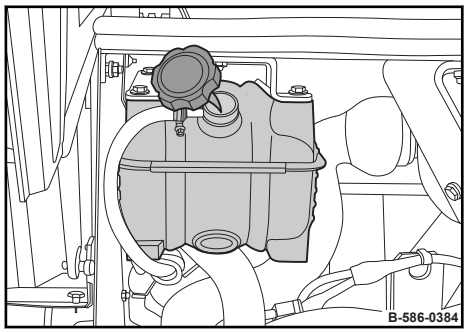

Fig. 163

8.8.5 Checking the hydraulic lines

This work must only be performed by an expert / qualified person!

1. Park the machine in secured condition ↳ *Chapter 6.8 'Parking the machine in secured condition' on page 131*.
2. Check all hydraulic lines.

   Hydraulic hoses must be immediately replaced if:

   - the outer layer is damaged down to the inlay (e.g. chafing, cuts, cracks),
   - embrittlement of the outer layer or formation of cracks in the hose material,
   - the hose shows deformation in pressurized and depressurized condition, which do not comply with the genuine shape of the hydraulic hose (e.g. layer separation, formation of blisters, crushed spots, buckling),
   - leaks on hose, socket or fitting,
   - the hydraulic hose has separated from the fitting,
   - fittings are damaged or deformed, whereby the function and strength of the hose - fitting connection is impaired,
   - the fitting shows corrosion that impairs both function and strength,
   - incorrect installation (squeezing, shearing or chafing points),
   - paint covered hydraulic hoses (no detection of identifications or cracks),
   - shelf life and service life exceeded.
3. Replace damaged hydraulic hoses immediately, fasten these properly and avoid chafing.
4. Only operate the machine after it has been repaired.

8.8.6 Servicing the battery, checking the battery isolation

8.8.6.1 Battery service

Maintenance free batteries also need care. Maintenance free only means that the fluid level does not need to be checked.

Every battery has a self-discharge, which may, if not checked occasionally, even cause damage to the battery as a result of exhaustive discharge.

Exhausted batteries (batteries with formation of sulphate on the plates) are not covered under warranty!

Protective equipment:

- Working clothes
- Protective gloves
- Safety goggles

1. Park the machine in secured condition *Chapter 6.8 'Parking the machine in secured condition' on page 131*.
2. Remove the battery and clean the battery compartment.
3. Clean the outside of the battery.
4. Clean battery poles and pole clamps and grease them with pole grease (Vaseline).
5. Install the battery and check the battery fastening.
6. On serviceable batteries check the acid level, if necessary top up to the filling mark with distilled water.

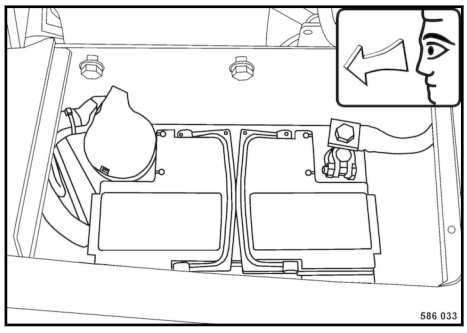

Fig. 164

8.8.6.2 Checking the main battery shutoff

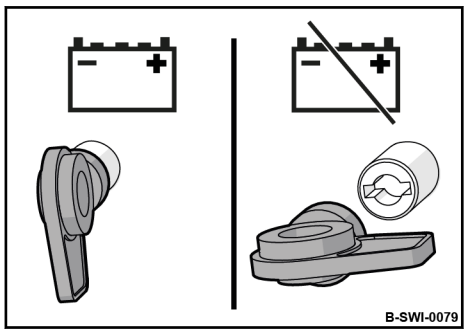

Fig. 165

1. Turn the main battery switch counter-clockwise and pull it out.
2. Check by turning the ignition key, whether the battery is disconnected from the electric system of the machine.

8.8.7 Servicing the air conditioning system

8.8.7.1 Cleaning the condenser

Protective equipment:

- Protective gloves
- Safety shoes
- Safety goggles
- Working clothes

1. Park the machine safely *Chapter 6.8 'Parking the machine in secured condition' on page 131*.
2. Allow the engine to cool down.
3. Remove the air scoop from both sides.

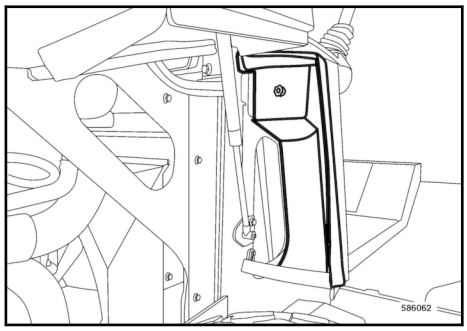

Fig. 166

The air conditioning condenser is located in front of the radiator.

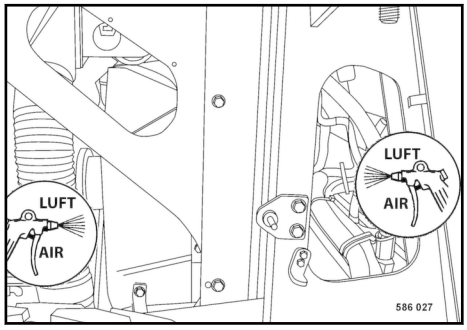

Fig. 167

4. **CAUTION!**
   Danger of eye injuries caused by particles flying around!
   – Wear your personal protective equipment (safety gloves, protective working clothes, goggles).

Clean the condenser fins with compressed air or water.

8.8.7.2 Air conditioning function test

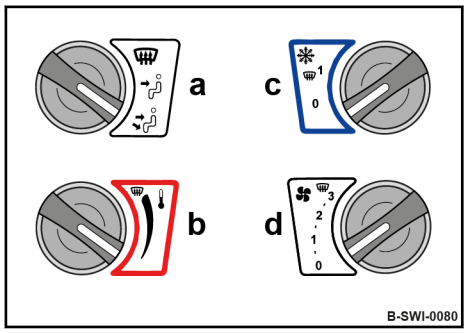

Fig. 168

a Adjust the air distribution
b Regulate the cabin temperature
c Air conditioning on/off
d Fan on/off

1. Start the engine.
2. Switch the fan to the highest stage.
3. Choose the lowest cabin temperature.
4. Switch the air conditioning on.
5. Direct the air flow into the cabin and check, that the flowing out air is considerably cooler.
   ⇨ If the outflowing air is considerably cooler, the air conditioning system is in good working order.

8.8.7.3 Checking the condition of the drier/collector unit

Have the drier/collector unit replaced by our customer service once every year before the operating season.

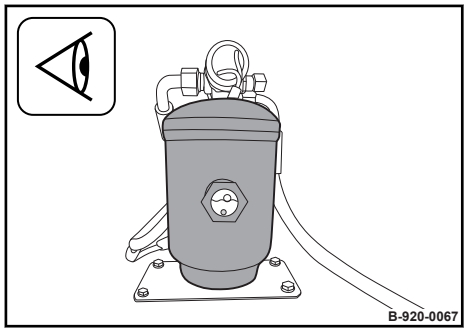

Fig. 169

1. Check the drier/collector unit for mechanical damage or rust.
2. In case of mechanical damage or rust, have the drier/collector unit immediately replaced by our customer service.
3. Start the engine.
4. Switch the air conditioning on.

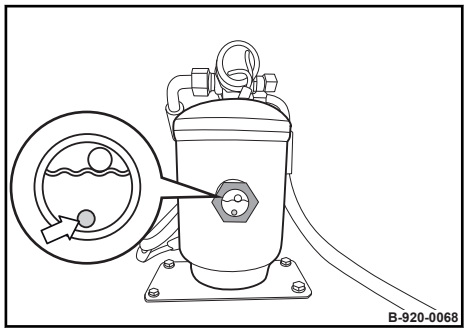

Fig. 170

5. Check the moisture indication pearl inside the inspection glass of the drier/collector unit.

orange	The degree of moisture in the drying agent is correct.
colourless	Moisture level of drying agent too high

6. If the moisture level of the drying agent is too high, have the drier/collector unit replaced by our customer service.

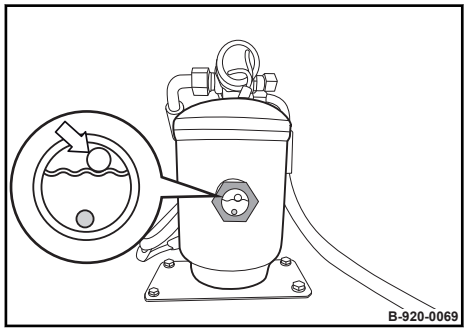

Fig. 171

7. Check the white floating ball inside the inspection glass of the drier/collector unit.

Ball floats right on top	The refrigerant level is correct.
Ball floats at bottom	The refrigerant level is not correct.

8. If the refrigerant level is too low, have the air conditioning system inspected by our customer service.

8.9 Every 1000 operating hours

8.9.1 Adjusting the valve clearance

NOTICE!
Danger of engine damage!
We recommend to have this work carried out by trained personnel or our after sales service.

– Before checking the valve clearance let the engine cool down for at least 30 minutes. The engine oil temperature must be below 80 °C (176 °F).

Valve clearance	
Intake valve	0.13 – 0.17 mm (0.0051 – 0.0067 in)
Exhaust valve	0.13 – 0.17 mm (0.0051 – 0.0067 in)

Adjustment schematic			
	Cylinder	Intake	Exhaust
Valve overlap on cylinder 4	1	x	x
	2	x	
	3		x
	4		
Valve overlap on cylinder 1	1		
	2		x
	3	x	
	4	x	x

Protective equipment:

- Working clothes
- Protective gloves

1. Park the machine in secured condition ↳ *Chapter 6.8 'Parking the machine in secured condition' on page 131*.
2. Allow the engine to cool down.
3. Loosen the plug-in connections (4) on the glow plugs (3).
4. Remove the glow plugs.
5. Remove the injection lines (1).
6. Remove the valve cover (2).

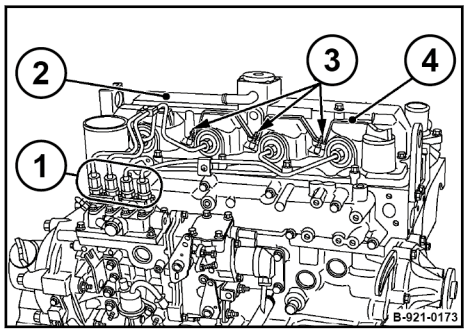

Fig. 172

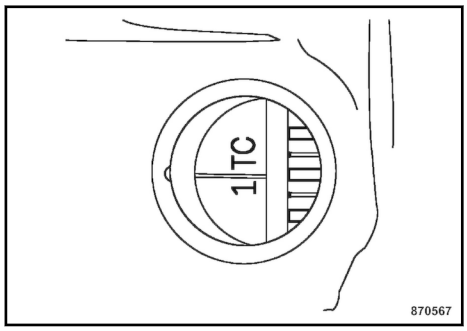

Fig. 173

7. Turn the crankshaft with the cranking device until the "1TC" marking on the flywheel is aligned with the notch of the housing.

   ⇨ Valve overlap on cylinder 1 or cylinder 4
8. Check the valve clearance according to the adjustment schematic, adjust if necessary.
9. Turn the crankshaft for another 360° and check the remaining valves according to the adjustment schematic, adjust if necessary.

Checking the valve clearance

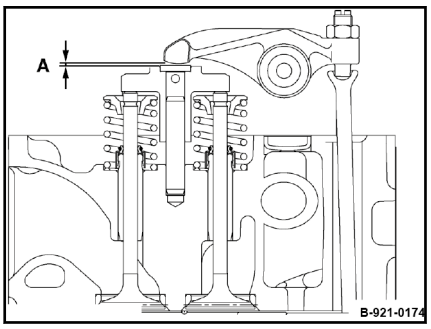

Fig. 174

1. Check valve clearance (A) between rocker arm and valve with a feeler gauge.
   ⇨ The feeler gauge must fit through the gap with little resistance.
2. If the gap is too narrow or too wide for the feeler gauge, adjust the valve clearance.

Adjusting the valve clearance

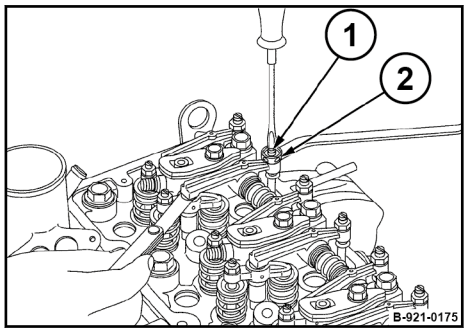

Fig. 175

1. Loosen counter nut (2).
2. Adjust the setscrew (1) with a screwdriver, until the feeler gauge can be inserted and pulled out with little resistance after retightening the counter nut.

Final work

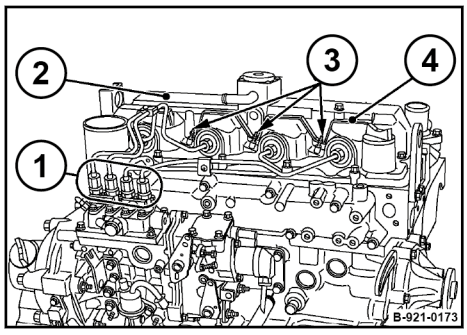

Fig. 176

1. Install all valve covers (2) again with new seal, tightening torque: 10 Nm (7.5 ft·lbf).
2. Install the injection lines (1), tightening torque: 30 Nm (22 ft·lbf).
3. Screw in the glow plugs (3) (tightening torque: 8 Nm (6 ft·lbf).
4. Attach the plug-in connections (4) to the glow plugs.
5. After a short test run, check the engine for leaks.

8.9.2 Checking the engine mounts

Protective equipment:
- Working clothes
- Protective gloves

1. Park the machine in secured condition ↳ *Chapter 6.8 'Parking the machine in secured condition' on page 131*.
2. Allow the engine to cool down.
3. Check air intake and exhaust manifold fastenings for tight fit.
4. Check sockets and clamps between air filter, exhaust turbocharger and charge air line as well as the engine oil lines for tight fit and leaks.
5. Check fastening screws on the engine oil sump and engine mounts for tight fit.
6. Check condition and tight fit of engine pillow blocks.

8.9.3 Replacing the hydraulic oil filter

Perform this maintenance work at the latest after one year.

NOTICE!
Components may get damaged!
- If the filter has to be changed together with the hydraulic oil, the filter must only be changed after the oil change and after the test run.
- Do not use the oil in the filter bowl again.
- Apart from the normal oil change intervals, the filter element must also be changed after major repairs in the hydraulic system.

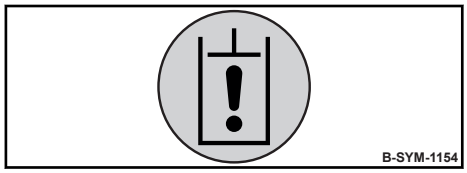

Fig. 177

If the hydraulic oil filter warning light comes on during start or operation, replace the hydraulic oil filter immediately.

Protective equipment:
- Working clothes
- Safety shoes
- Protective gloves

1. Park the machine safely *Chapter 6.8 'Parking the machine in secured condition' on page 131*.
2. Allow the engine to cool down.
3. Unscrew the filter bowl (3).

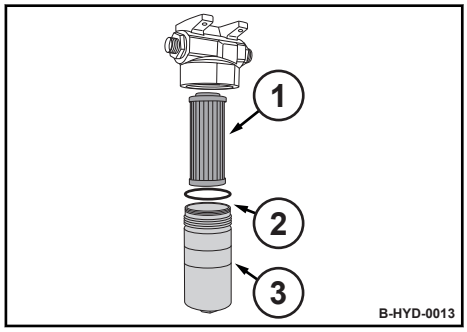

Fig. 178

NOTICE!

Negligence may cause destruction to the entire hydraulic system!

- Visible dirt may be an early sign for the failure of system components and indicate the possible failure of components.
- In this case determine the cause and replace or repair the defective components, if necessary.
- Do not clean or reuse the filter element.

4. Take the old filter element (1) out and clean the filter bowl.
5. Clean the thread on the filter bowl.
6. Reassemble the filter bowl with a new filter element and a new O-ring (2).
7. After a short test run check the filter for leaks.
8. Dispose of the oil and filters in line with environmental regulations.

8.9.3.1 Replacing the high pressure filter

The high pressure filter is only installed in connection with the dozer blade.

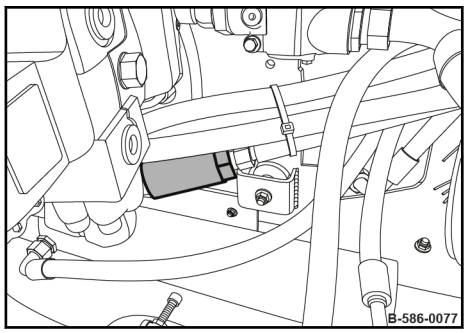

Fig. 179

1. Clean the area around the high pressure filter.
2. Disconnect the hydraulic oil lines from the high pressure filter.
3. Remove the high pressure filter and assemble the new high pressure filter, pay attention to the flow direction (arrow).
4. Connect and tighten the hydraulic lines.
5. After a test run check for leaks.
6. Dispose of the filter environmentally.

8.9.4 Change the oil in the drive axle

NOTICE!
Components may get damaged!
- Drain gear oil only at operating temperature.
- Use only gear oil of the permitted specification ↳ *Chapter 8.3.6 ‘Gear oil SAE 80W-140’ on page 161*.
- Filling quantity: ↳ *Chapter 8.4 ‘List of fuels and lubricants’ on page 162*.

Protective equipment:

- Working clothes
- Protective gloves

1. Park the machine in secured condition
↳ *Chapter 6.8 'Parking the machine in secured condition' on page 131*.

WARNING!
Danger of burning on hot components!
– Wear your personal protective equipment (protective gloves, protective clothing).
– Avoid touching hot components.

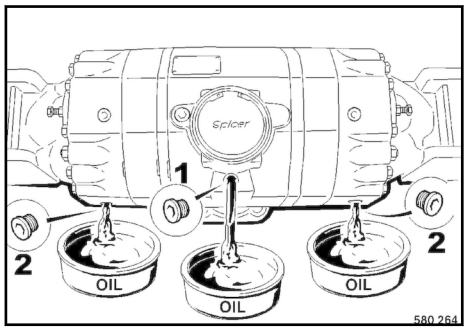

Fig. 180

2. Clean the area around all drain plugs and oil level inspection plugs
3. Unscrew the drain plugs and oil level inspection plugs and catch any oil running out.
4. Turn the drain plugs tightly back in.

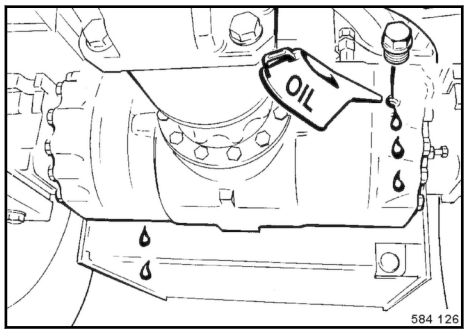

Fig. 181

5. Fill in fresh gear oil through the oil level inspection bores, until it has reached the bottom edge of the bore.

A second oil level inspection plug is located on the opposite side.

6. After filling in oil, wait until the oil has evenly distributed itself inside the axle, if necessary fill in some more oil.
7. Turn the oil level inspection plugs tightly back in.
8. Dispose of oil in an environmentally friendly way.

8.9.5 Changing the oil in the wheel hubs

NOTICE!
Components may get damaged!
- Drain gear oil only at operating temperature.
- Use only gear oil of the permitted specification ↳ *Chapter 8.3.6 'Gear oil SAE 80W-140' on page 161*.
- Filling quantity: ↳ *Chapter 8.4 'List of fuels and lubricants' on page 162*.

Protective equipment:
- Working clothes
- Protective gloves

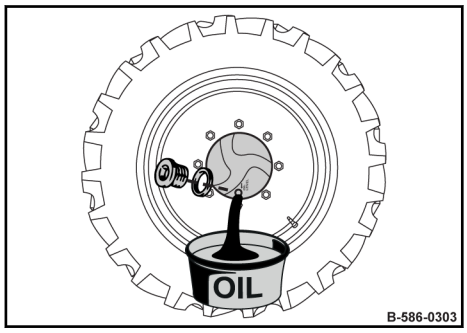

Fig. 182

1. Move the drum, until the oil level inspection plug is in bottom position.
2. Park the machine in secured condition ↳ *Chapter 6.8 'Parking the machine in secured condition' on page 131*.

WARNING!
Danger of burning on hot components!
- Wear your personal protective equipment (protective gloves, protective clothing).
- Avoid touching hot components.

3. Clean the area around the oil level inspection plug.
4. Unscrew the oil level inspection plug and catch any oil running out.

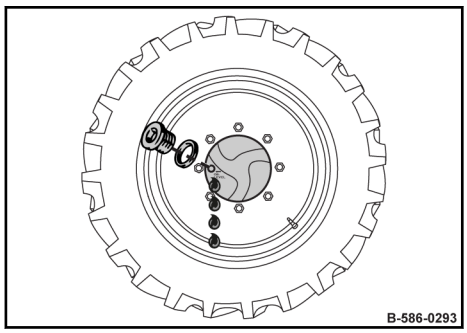

Fig. 183

5. Move the drive wheel, until the oil level inspection plug (1) is in horizontal position.
6. Fill in fresh gear oil through the oil level inspection bore, until it has reached the bottom edge of the bore.
7. Turn the oil level inspection plug tightly back in.
8. Change the oil in both wheel hubs.
9. Dispose of oil in an environmentally friendly way.

8.9.6 Change the oil in the exciter housing

NOTICE!
Components may get damaged!
- Drain gear oil only at operating temperature.
- Use only gear oil of the permitted specification ↳ *Chapter 8.3.5 'Gear oil SAE 75W-90' on page 161*.
- Filling quantity: ↳ *Chapter 8.4 'List of fuels and lubricants' on page 162*.

Protective equipment:
- Working clothes
- Protective gloves

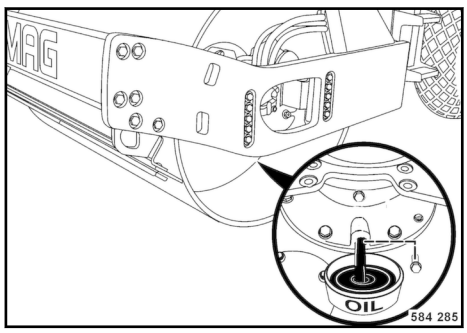

Fig. 184

1. Move the drum, until the filler plug is in bottom position.
2. Park the machine in secured condition ↳ *Chapter 6.8 'Parking the machine in secured condition' on page 131*.

WARNING!
Danger of burning on hot components!
– Wear your personal protective equipment (protective gloves, protective clothing).
– Avoid touching hot components.

3. Clean the area around the filler plug.
4. Unscrew the filler plug and collect any oil running out.
5. Once all oil has been drained off, move the drum, until the oil level inspection plug (2) is in bottom position.
6. Clean the area around the oil level inspection plug and unscrew the plug.
7. Fill in oil through the filler bore, until it starts to run out through the level inspection bore.
8. Screw oil level inspection plug (2) and drain plug (1) back in with new seal rings.
9. Dispose of oil in an environmentally friendly way.

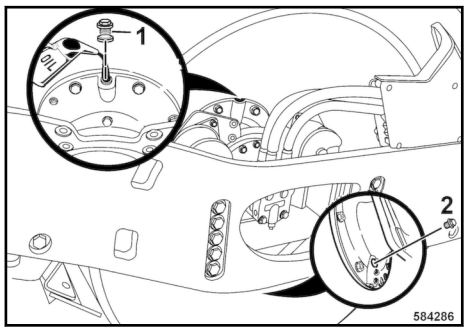

Fig. 185

8.9.7 Change the oil in the drum drive reduction gear

NOTICE!
Components may get damaged!
- Drain gear oil only at operating temperature.
- Use only gear oil of the permitted specification ↳ *Chapter 8.3.6 'Gear oil SAE 80W-140' on page 161*.
- Filling quantity: ↳ *Chapter 8.4 'List of fuels and lubricants' on page 162*.

Protective equipment:
- Working clothes
- Protective gloves

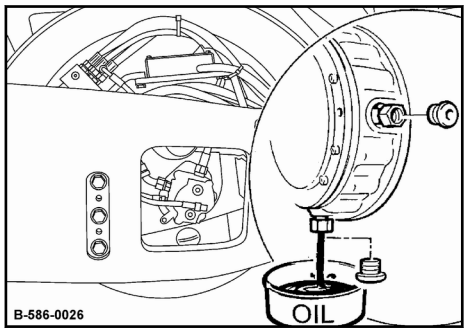

Fig. 186

1. Move the drum, until the oil level inspection plug is in bottom position.
2. Park the machine in secured condition ↳ *Chapter 6.8 'Parking the machine in secured condition' on page 131*.

WARNING!
Danger of burning on hot components!
- Wear your personal protective equipment (protective gloves, protective clothing).
- Avoid touching hot components.

3. Clean the area around the oil level inspection plug.
4. Unscrew the oil level inspection plug and catch any oil running out.

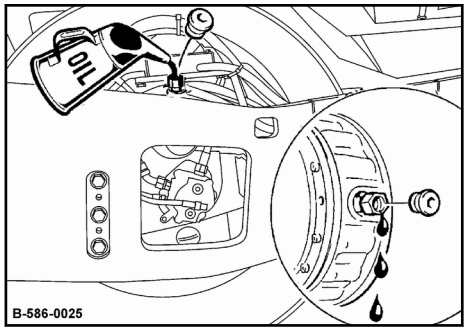

Fig. 187

5. Once all oil has been drained off move the drum, until the oil level inspection plug is in horizontal position and the filler bore is in top position.
6. Park the machine in secured condition ↬ *Chapter 6.8 'Parking the machine in secured condition' on page 131*.
7. Clean the area around the filler plug and unscrew the filler plug.
8. Fill in oil, until it reaches the bottom edge of the inspection bore.
9. Retighten the oil level inspection and filler plug.
10. Dispose of oil in an environmentally friendly way.

8.9.8 Retightening the fastening of the axle on the frame

Protective equipment:
- Working clothes
- Protective gloves

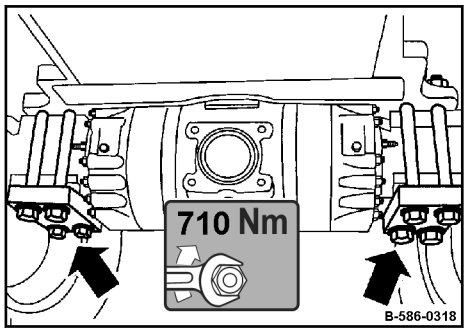

Fig. 188

1. Check all fastening nuts on axle mounting bolts for tight fit, retighten if necessary, tightening torque: 710 Nm (524 ft·lbf).

8.9.9 Retightening the wheel nuts

Protective equipment:

- Working clothes
- Protective gloves

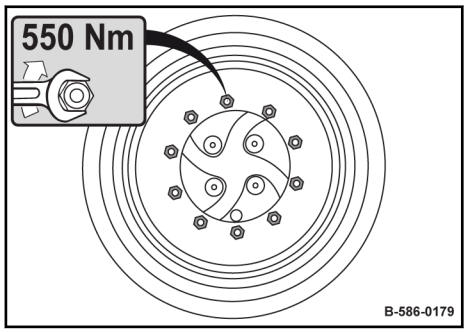

Fig. 189

1. Tighten the wheel nuts cross-wise, tightening torque: 550 Nm (405 ft·lbf).

8.9.10 Checking the ROPS

On machines with cabin the ROPS (roll over protection structure) is an integral part of the cabin.

All bolted connections must comply with the specifications and should be absolutely tight (observe the tightening torques).

Screw and nuts must not be damaged, bent or deformed.

Unusual movements and noises (vibrations) during operation are signs for damage or loosened fastening elements.

1. Inspect the cabin, especially the ROPS, for cracks, corrosion, damage and missing fastening parts.
2. Check the fastening screws for the cabin (ROPS) to the operator's stand for tight fit.
3. Check the rubber buffers of the operator's platform suspension for condition and tight fit.
4. Check the condition and fastening of the seat belts.

8.9.11 Checking the travel lever control

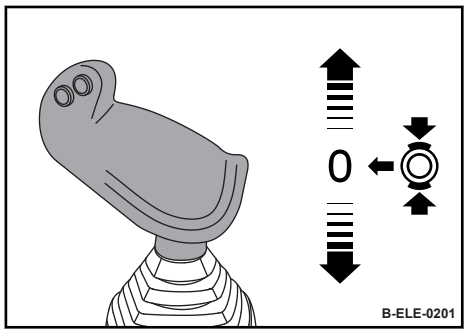

Fig. 190

1. Park the machine safely *Chapter 6.8 'Parking the machine in secured condition' on page 131*.
2. Move the travel lever forward, backwards and to braking position. Thereby check for function, light movement, clearance and damage.
3. In case of malfunction perform trouble-shooting and replace the corresponding parts.

   Replace broken travel lever only completely.
4. Only operate the machine after it has been repaired.

8.9.12 Cleaning the circulation air filter of the heating

Protective equipment:

- Working clothes
- Safety shoes
- Protective gloves

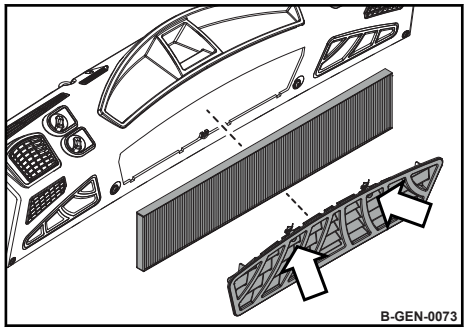

Fig. 191

1. Park the machine safely *Chapter 6.8 'Parking the machine in secured condition' on page 131*.
2. Loosen the locks and remove the cover.
3. Take out the filter.
4. Clean the filter, replace if necessary.
5. Insert the filter and reinstall the cover.

8.10 Every 2000 operating hours

8.10.1 Changing the hydraulic oil

Perform this maintenance work at the latest after two years.

The hydraulic oil must also be changed after major repairs in the hydraulic system.

Always replace the hydraulic oil filter after each hydraulic oil change. Change the hydraulic oil filter only after the hydraulic oil change and after the test run.

Do not start the engine after draining off the hydraulic oil.

Do not use any detergents to clean the system.

Use only lint-free cleaning cloths for cleaning.

When changing from mineral oil based hydraulic oil to an ester based biologically degradable hydraulic oil, you should consult the lubrication oil service of the oil manufacturer, or our customer service for details.

NOTICE!

Risk of damage!

- Perform the oil change when the hydraulic oil is warm.
- Use only hydraulic oil of the permitted specification *Chapter 8.3.4 'Hydraulic oil' on page 160*.
- Filling quantity: *Chapter 8.4 'List of fuels and lubricants' on page 162*.

Protective equipment:

- Working clothes
- Safety shoes
- Protective gloves

1. Park the machine safely *Chapter 6.8 'Parking the machine in secured condition' on page 131*.

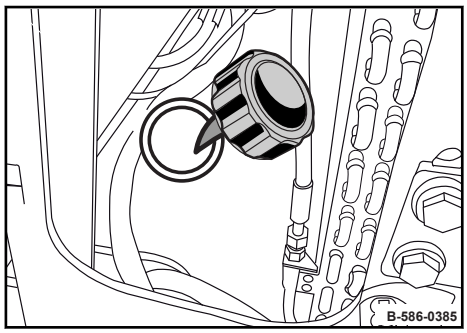

Fig. 192

2. Clean the area around the filling port and remove the cap.

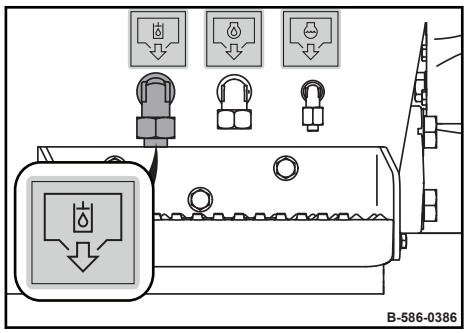

Fig. 193

3. **WARNING!**
Danger of burning on hot components!
   – Wear your personal protective equipment (protective gloves, protective clothing).
   – Avoid touching hot components.

   Unscrew the plug.
4. Drain off and collect all hydraulic oil.
5. Turn the plug tightly back in.

We recommend to use our filling and filtering unit with fine filter to fill the system. This ensures finest filtration of the hydraulic oil, prolongs the lifetime of the hydraulic oil filter and protects the hydraulic system.

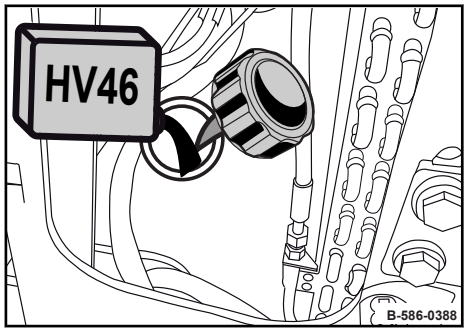

Fig. 194

6. Fill in new hydraulic oil.

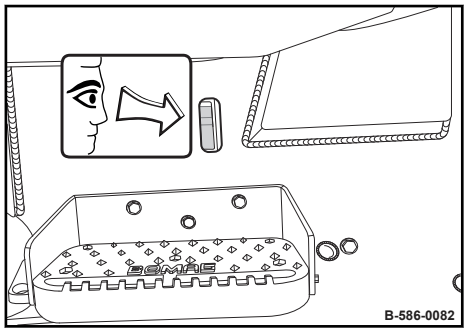

Fig. 195

7. Check the oil level in the inspection glass.

Normal level	Approx. 3 cm (1.2 in) below the top edge of the inspection glass
Minimum level	Middle of inspection glass

8. *The breather filter for the hydraulic oil tank is integrated in the cap, you must therefore replace the complete cap.*

   Close the tank with a new cap.

9. Dispose of oil in line with environmental regulations.

8.10.2 Changing the coolant

Perform this maintenance work at the latest after two years.

Do not start the engine after draining off the coolant.

In case of lubrication oil entering into the cooling system or a suspicious turbidity caused by corrosion residues or other suspended matter, the coolant must be drained off and the complete cooling system needs to be cleaned.

Oil can damage the sealing materials used in the cooling system.

If oil has entered, you must add a cleansing agent in order to remove any residues from the system. Follow the instructions of the manufacturer! If in doubt, consult your Customer Service or the engine manufacturer.

When changing the coolant without any signs of contamination, cleaning of the cooling system is not necessary.

NOTICE!

Danger of engine damage!

- Use only coolant of the permitted specification ↳ *Chapter 8.3.3 ‘Coolant’ on page 158*.
- Do not mix different coolants and additives of any other kind.
- Filling quantity: ↳ *Chapter 8.4 ‘List of fuels and lubricants’ on page 162*

Protective equipment:

- Working clothes
- Safety shoes
- Protective gloves
- Safety goggles

1. Park the machine safely ↳ *Chapter 6.8 ‘Parking the machine in secured condition’ on page 131*.
2. Allow the engine to cool down.

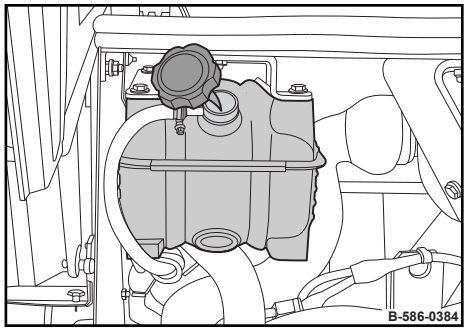

Fig. 196

3. Remove the cap from the compensation tank.

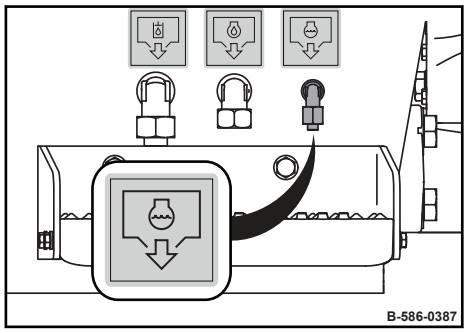

Fig. 197

4. Unscrew the plug.
5. Drain off and collect all coolant.
6. Turn the plug tightly back in.
7. Check the condition of the coolant.
8. Thoroughly flush the cooling system if the coolant is contaminated by corrosion residues or other suspended matter.
9. Remove the thermostat.
10. Fill with clean water.
11. Start the engine and run to operating temperature.
12. Allow the engine to cool down to approx. 50 °C (122 °F).
13. Drain off all water.
14. If using a cleaning agent repeat the flushing process twice with clear water.
15. Reinstall the thermostat.

NOTICE!
Danger of engine damage!
The anti-freeze concentration (additive) must be at least 35 Vol% and maximum 45 Vol%.

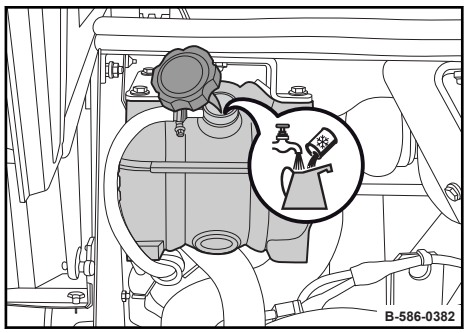

Fig. 198

16. Fill in coolant up to the “MAX” mark.
17. Close the cap.
18. Start the engine and run to operating temperature.
19. Let the engine cool down and check the coolant level again, top up if necessary.
20. Dispose of coolant in line with environmental regulations.

8.10.3 Replacing the fuel lines

This work must only be performed by authorized service personnel.

Perform this maintenance work at the latest after two years.

8.10.4 Replacing injection nozzles

This work must only be performed by authorized service personnel.

8.11 Every 3000 operating hours

8.11.1 Checking the turbo charger

This work must only be performed by authorized service personnel.

8.11.2 Checking the fuel injection pump

This work must only be performed by authorized service personnel.

8.12 As required

8.12.1 Air filter maintenance

NOTICE!
Danger of engine damage!

- Do not start the engine after having removed the air filter.
- If necessary, the air filter may be cleaned up to six times. After one year at the latest it must be replaced together with the safety element.
- Cleaning does not make sense if the air filter element is covered with a sooty deposit.
- Do not use gasoline or hot fluids to clean the filter element.
- After cleaning, the air filter must be inspected for damage using a torch.
- Do not continue to use a damaged air filter element. If in doubt use a new air filter.
- If the air filter is damaged, the safety element must be replaced as well.
- The safety element must not be cleaned.

We generally recommend to renew the air filter. A new filter element is far less expensive than a possible engine damage.

Protective equipment:

- Working clothes
- Protective gloves
- Safety goggles

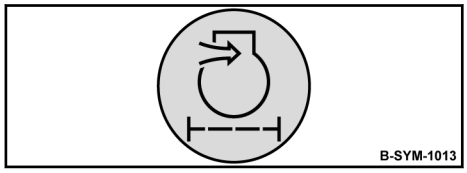

Fig. 199

1. Maintenance of the air filter is due when the air filter warning lamp lights up, but at the latest after one year.
2. Park the machine in secured condition ↳ *Chapter 6.8 'Parking the machine in secured condition' on page 131*.
3. Allow the engine to cool down.
4. Loosen both locking hooks on the housing cover and take the cover off.
5. Clean housing cover and dust discharge valve.

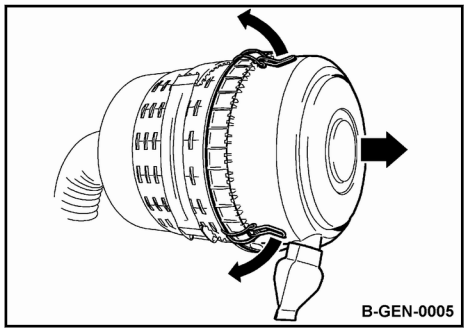

Fig. 200

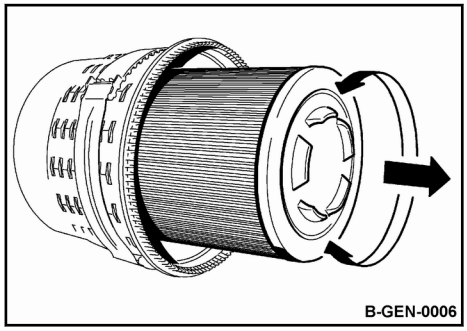

Fig. 201

6. Pull out the air filter with light turning movements.

CAUTION!
Danger of eye injuries caused by particles flying around!
– Wear your personal protective equipment (safety gloves, protective working clothes, goggles).

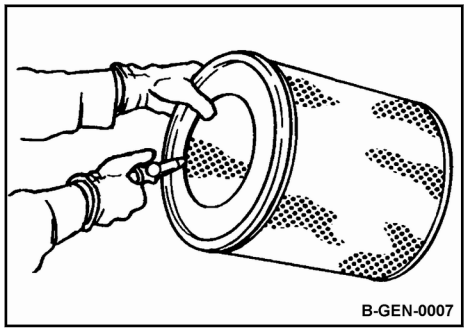

Fig. 202

7. Blow the air filter out with dry compressed air (max. 2.1 bar (30 psi)) from inside to outside by moving the gun up and down inside the element, until it if free of dust.

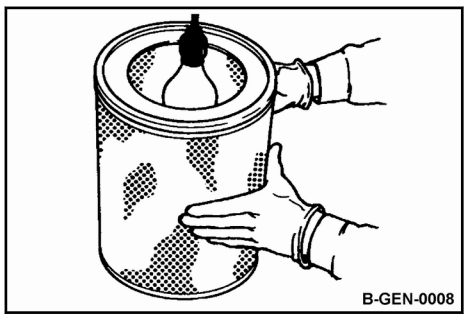

Fig. 203

8. Examine the air filter with a torch for cracks and holes in the paper bellows.

9. In case of damage replace the air filter and the safety element.

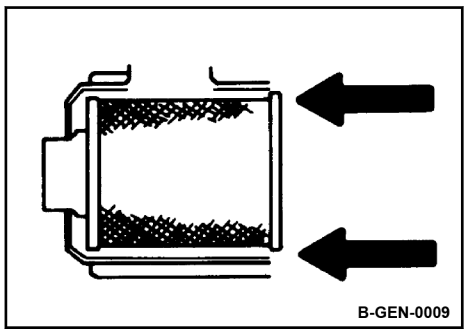

Fig. 204

10. Slide the air filter carefully into the housing.

NOTICE!
Danger of engine damage!
– The dust discharge valve must point vertically downwards.
– Make sure that the cover locks engage correctly.

11. Reassemble the housing cover.

8.12.1.1 Replacing the safety element

NOTICE!
Danger of engine damage!
The safety element must not be cleaned and should not be used again after it has been removed.

The safety element must be replaced:

– if the air filter is damaged.
– at the latest after one year.
– if the air filter warning light comes on again after the air filter has been cleaned.

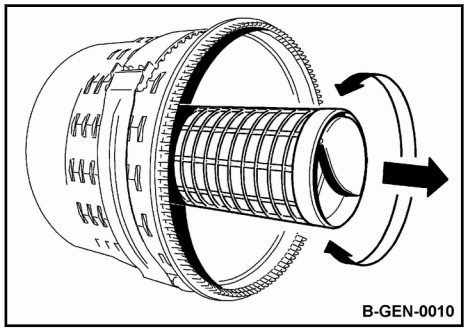

Fig. 205

1. Remove the housing cover and pull the air filter element off.
2. Pull the safety element out by turning it lightly.
3. Push in a new safety element.
4. Insert the air filter and reassemble the housing cover.

8.12.2 Checking and cleaning the water separator

The service intervals for the water separator depend on the water content in the fuel and can therefore not be determined precisely.

After taking the engine into operation you should check for signs of water and dirt initially every day.

Protective equipment:

- Working clothes
- Safety shoes
- Protective gloves

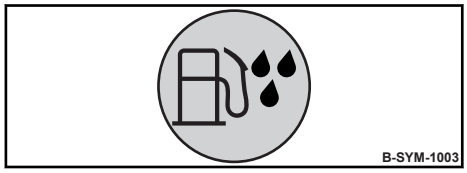

Fig. 206

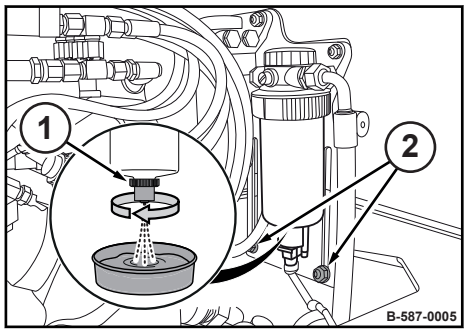

Fig. 207

1. If the “water in fuel” warning light lights up when starting or during operation, drain the water from the fuel pre-filter immediately.
2. Park the machine safely *Chapter 6.8 ‘Parking the machine in secured condition’ on page 131*.
3. Slightly loosen the fastening screws (2) on the bracket, so that the filter bracket can be moved.
4. Pull the filter bracket carefully up and tighten the screws.
5. Loosen the drain plug (1) and drain the fluid until pure diesel fuel starts to run out.
6. Screw the drain plug back in tightly. Check for leaks; if necessary, use a new seal ring.
   ⇨ Once the water separator is empty, the warning light for water in fuel must go out.
7. Slightly loosen the fastening screws (2) on the bracket, so that the filter bracket can be moved.
8. Push the filter bracket carefully down and tighten the screws.
9. Dispose of collected fluid in line with environmental regulations.

8.12.3 Adjusting the scrapers

Smooth drum scrapers

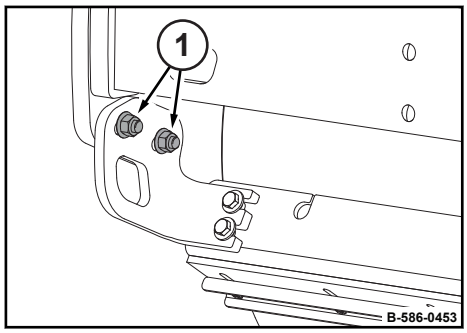

Fig. 208

1. Check the setting and condition of the front and rear scrapers; if necessary, adjust or replace the scraper rubber.
2. In order to adjust the scrapers, loosen the fastening screws (1) in the slots and push the scraper bracket towards the drum against the end stop.
3. Fasten the fastening screws again.

Scrapers on smooth drums with padfoot shell

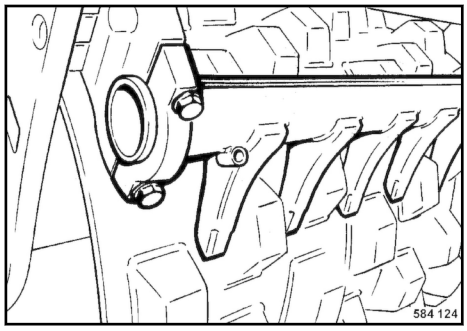

Fig. 209

1. Check the setting and condition of the scrapers; adjust or replace the teeth if necessary.
2. To adjust the scrapers loosen the clamping screws and push the scrapers towards the drum, leaving a gap of about 25 mm.
3. Retighten the clamping screws.

8.12.4 Cleaning the machine

Clean the machine thoroughly at least once a week.

If necessary, clean the machine daily for example when used on highly cohesive soils or cement.

Do not climb on the machine to clean it.



WARNING!
Danger of injury caused by falling off the platform!
– Always ensure safe standing.

Protective equipment:

- Working clothes
- Protective gloves
- Safety goggles

1. Park the machine in secured condition ↳ *Chapter 6.8 'Parking the machine in secured condition' on page 131*.
2. Allow the engine to cool down.
3. When cleaning with a high pressure cleaner, do not subject electrical parts and insulation material to the direct jet of water, or cover them beforehand.
4. If necessary, clean the windows using a telescopic rod.

8.12.5 Filling the windscreen washer tank

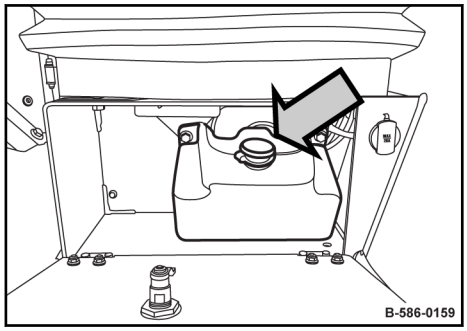

Fig. 210

1. Open the flap under the driver's seat on the left hand side.
2. Check the fluid level in the provision container, top up if necessary.
3. If there is a risk of frost, you may also fill the provision container with an anti-freeze mixture.

8.12.6 Replacing the paper roll in the printer

Optional equipment

1. If the status LED flashes 3 times, check the paper.
2. Open the printer.
3. If a red line appears on the paper, install a new paper roll.
4. Remove the used paper roll.
5. Insert the new paper roll.

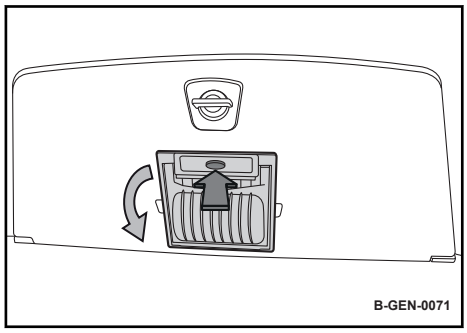

Fig. 211

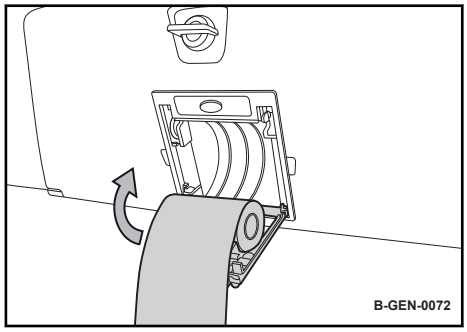

Fig. 212

6. Close the cover.

8.12.7 Drain the fuel tank sludge

Protective equipment:
- Working clothes
- Protective gloves

1. Park the machine in secured condition ↳ *Chapter 6.8 'Parking the machine in secured condition' on page 131*.
2. Unscrew the drain plug and drain off and catch approx. 5 litres of fuel.
3. Turn the drain plug tightly back in.
4. Dispose of fuel environmentally.

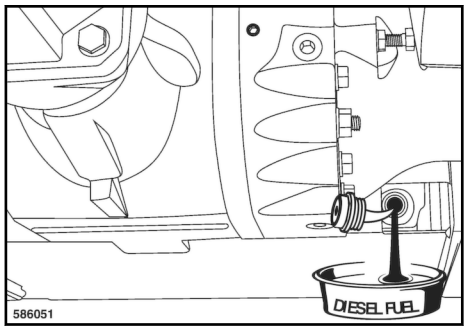

Fig. 213

8.12.8 Measures prior to extended shut-down period

8.12.8.1 Measures before shutting down

If the machine is shut down for a longer period of time, e.g. winter season, the following work must be carried out:

1. Clean the machine thoroughly.
2. After shutting down store the machine under cover in a dry and well ventilated room.
3. Grease the bare piston rods of all hydraulic cylinders well and pull them in as far as possible.
4. Spray a thin oil film onto to all lever joints and bearing points without lubrication.
5. Repair damaged paint; preserve bare areas thoroughly with anti-corrosive agent.
6. Clean the water separator.

7. Fill the fuel tank with diesel fuel to prevent the formation of condensation water in the tank.
8. Change engine oil and oil filter if the oil has been changed more than 300 hours ago, or if the oil is older than 12 months.
9. Check the anti-freeze concentration and the coolant level.
10. Disconnect the ground strap from the battery (this avoids self-discharge caused by closed-circuit consuming devices).

8.12.8.2 Battery service during prolonged machine downtimes



WARNING!

Danger of injury caused by exploding gas mixture!

- Remove the plugs before starting to recharge the battery.
- Ensure adequate ventilation.
- Smoking and open fire is prohibited!
- Do not lay any tools or other metal objects on the battery.
- Do not wear jewellery (watch, bracelets, etc.) when working on the battery.
- Wear your personal protective equipment (protective gloves, protective clothing, goggles).

Protective equipment:

- Working clothes
- Protective gloves
- Safety goggles

1. Switch off all consuming devices (e.g. ignition, light).
2. Measure the open-circuit voltage of the battery at regular intervals (at least 1 x per month).
   ⇨ Reference values: 12.6 V = fully charged; 12.3 V = discharged to 50%.
3. Recharge the battery immediately after an open-circuit voltage of 12.25 V or less is reached. Do not perform boost charging.
   ⇨ The open-circuit voltage of the battery occurs approx. 10 hours after the last charging process or one hour after the last discharge.
4. Switch off the charging current before removing the charging clamps.
5. After each charging process allow the battery to rest for one hour before taking it into service.
6. For standstill periods of more than one month you should always disconnect the battery. Do not forget to perform regular open-circuit voltage measurements.

8.12.8.3 Measures before restarting

1. Replace the fuel filter.
2. Replace the air filter.
3. Change engine oil and oil filter.
4. Check the coolant level.

5. Check the charge condition of the batteries, recharge if necessary. Check the battery fluid level before and after charging.
6. Connect the ground straps to the batteries.
7. Check the function of the electric system.
8. Check cables, hoses and lines for cracks and leaks.
9. Check the service life of hydraulic hoses and replace if necessary.
10. Start the engine and run it for 15 to 30 minutes with idle speed.
11. While the engine is running keep an eye on the gauges for engine oil pressure and coolant temperature.
12. Check the oil levels.
13. Check the function of electric system, steering and brakes.
14. Clean the machine thoroughly.

Maintenance – As required

9 Setting up / refitting

9.1 Attaching the padfoot shells

9.1.1 Preliminary remarks and safety notes

Loads are only to be attached and hoisted by an expert/qualified person.

Do not use lifting points that are damaged or impaired in any other way.

Only use lifting and lashing tackle with sufficient load bearing capacity for the weight to be loaded.

Always use appropriate lifting and lashing tackle at the lifting and lashing points.

Use lifting tackle only in the specified loading direction.

When lifting the machine, avoid uncontrolled movements of the load. If necessary, hold the load with guide ropes.

At least two people are required when attaching and detaching the segments.

Weights

Padfoot shell segment	Scraper
Approx. 277 kg (611 lbs) each	Approx. 79 kg (174 lbs) each

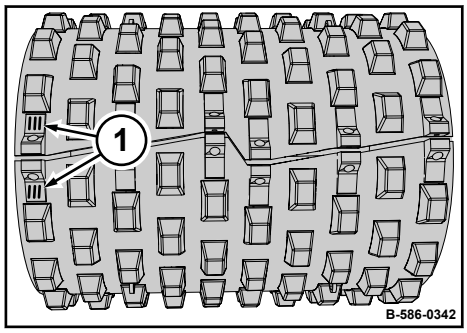

Fig. 214

1 Weld seam identification

During production, 1, 2 or 3 weld seams are applied to the individual segments as identification in order to ensure that the individual segments stay together.

9.1.2 Preparations

Protective equipment:

- Working clothes
- Safety shoes
- Protective gloves
- Safety goggles

1. Drive the machine onto level, firm ground.

   Make sure there is sufficient space to drive the machine for at least one full turn of the drum.

2. Apply the parking brake.
3. Turn the ignition key to position “0” and pull it out.
4. Clean the drum.

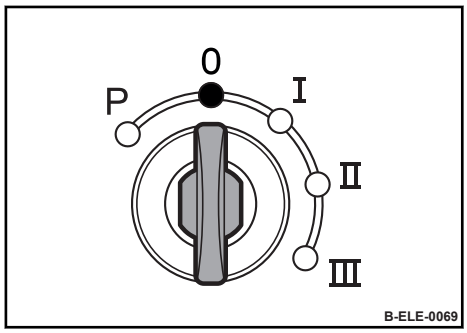

Fig. 215

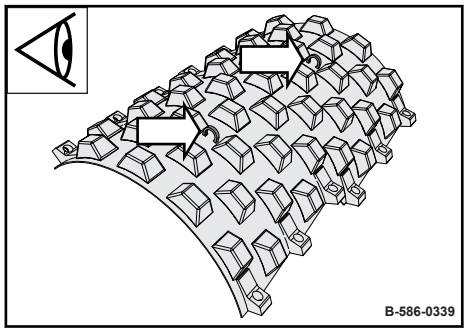

Fig. 216

5. Check all three segments for damage to the lifting points.
   ⇨ Do not use lifting points that are damaged or impaired in any way.
6. Check all three segments for deformation.
   ⇨ Do not use damaged or badly bent segments.
7. Clean all three segments.

8. Clean screw connection points of disconnected bolts, nuts and dirt.

If necessary, use a drill with wire brush attachment to clean the screw connection points.

9.1.3 Removing the scrapers

Protective equipment:

- Working clothes
- Safety shoes
- Protective gloves

Front scraper

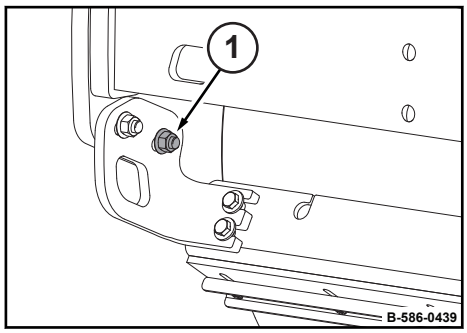

Fig. 217

1. Remove the nuts (1) of the rear fastening screw on both sides.

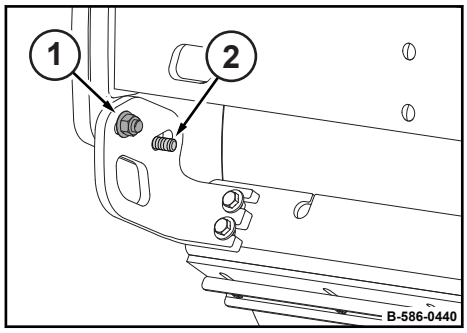

Fig. 218

2. Loosen the nuts (1) of the front fastening screw several turns on both sides.

WARNING!
Danger of injury caused by heavy component!
- When removing the bolts make sure nobody is within the swivel range of the scraper!
- Persons may only stand to the side of the crossbar.

3. Pull out the rear fastening screw (2) on both sides.

   ⇨ The scraper swivel downwards.

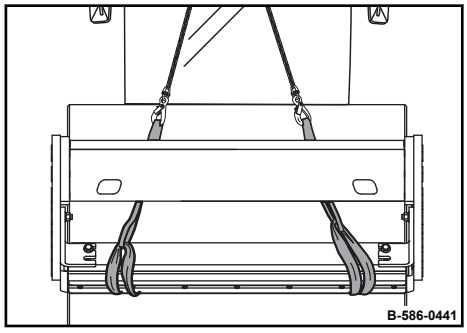

Fig. 219

4. Attach the lifting tackle to the front scraper as perpendicularly as possible and secure with suitable lifting tackle.
5. Unscrew the remaining nuts and pull out the fastening screws on both sides.
6. Lower the front scraper to the ground or onto a pallet and pull to the side.

Rear scraper

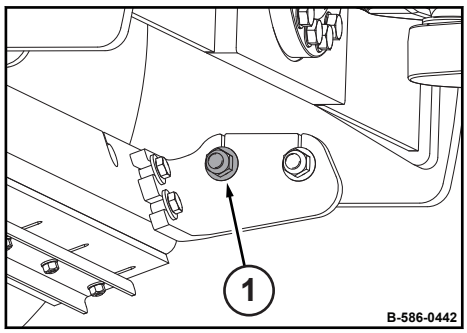

Fig. 220

7. Remove the nuts (1) of the front fastening screw on both sides.

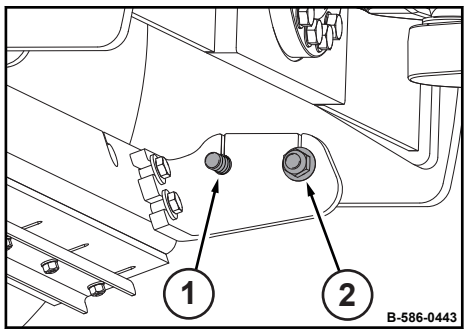

Fig. 221

8. Loosen the nuts (2) of the rear fastening screw several turns on both sides.

WARNING!
Danger of injury caused by heavy component!
- When removing the bolts make sure nobody is within the swivel range of the scraper!
- Persons may only stand to the side of the crossbar.

9. Pull out the front fastening screw (1) on both sides.

⇨ The scraper swivel downwards.

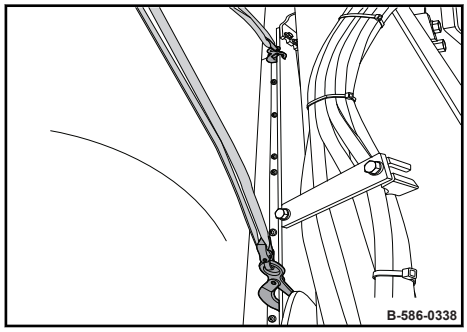

Fig. 222

10.

NOTICE!
Components may get damaged!
- Make sure no components of the driver's stand get damaged.
- Particularly in the case of machines with cabs, make sure that the windows do not get damaged.
  If necessary, protect the window (e.g. with a board).

Attach the lifting tackle to the rear scraper as perpendicularly as possible and secure with suitable lifting tackle.

11. Unscrew the remaining nuts and pull out the fastening screws on both sides.

12. Lower the rear scraper to the ground or onto a pallet and pull to the side.

9.1.4 Attaching segments

Protective equipment:

- Working clothes
- Safety shoes
- Protective gloves

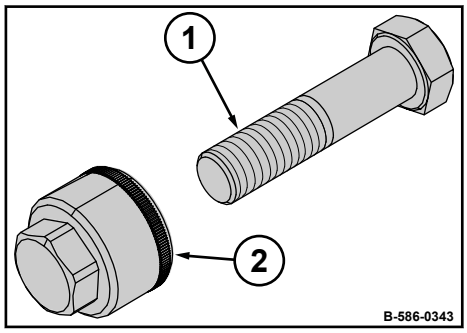

Fig. 223

1 Hexagon screw M20 x 80 *(BOMAG 071 320 32)*
2 Cap nut M20 with knurl *(BOMAG 580 038 44)*

To fasten the segments together first use M20 x 130 screws.

Once all segments are attached to the drum, replace those screws with M20 x 80 screws.

Use new screws and nuts!

NOTICE!

Components may get damaged!

– When fastening, always turn the screw itself.
– The cap nut is fitted with a knurl which holds the nut in the retainer.

  If the retainer on the cap is turned, the knurl may get damaged which means the required tightening torque cannot be achieved.

1. Segment

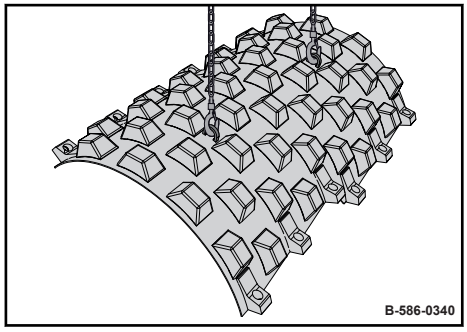

Fig. 224

1. Attach suitable lifting tackle to the lifting eyes of the first segment.

CAUTION!

Danger of crushing when positioning the individual segments!

– Never put your hands between the segment and drum or machine parts.

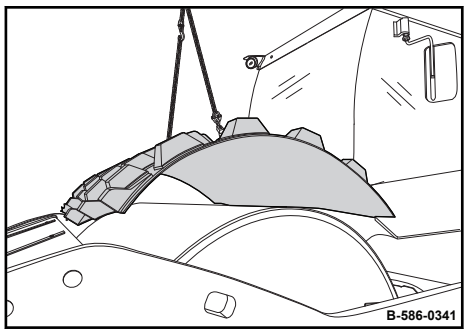

Fig. 225

2. Lift the first segment using suitable lifting tackle, position as centrally as possible on the drum and set down.

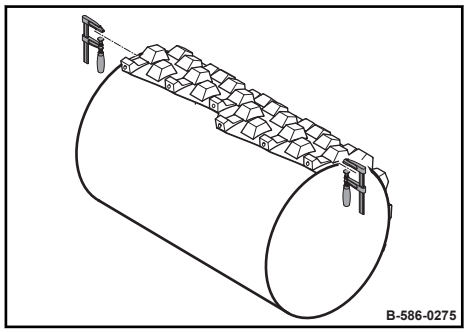

Fig. 226

3. Fix the segment to the drum both right and left with a vice.

If there are four vices available, it is useful to fix the segment front and back with a vice.

4. Start the engine and move the machine back as far as necessary to be able to set down the next segment on the drum from above.

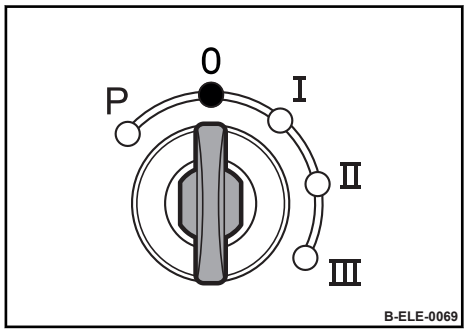

Fig. 227

5. Turn the ignition key to position “0” and pull it out.

2. Segment

6. Select the right segment.

CAUTION!
Danger of crushing when positioning the individual segments!
– Never put your hands between the segment and drum or machine parts.

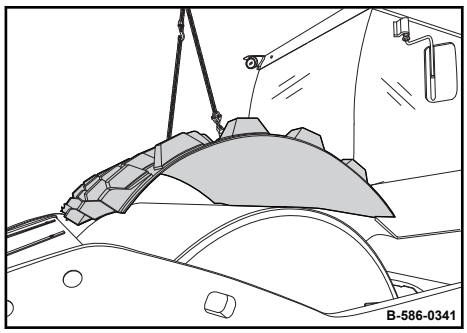

Fig. 228

7. Lift the second segment using suitable lifting tackle, position as centrally as possible on the drum and set down.
8. Loosely connect the two segments using screws of length M20 x 130 (4 to 5 thread turns).

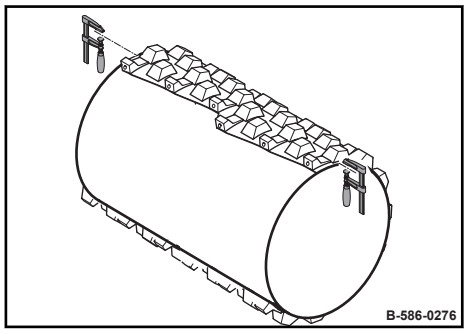

Fig. 229

9. Fix the second segment to the drum both right and left with a vice.
10. Start the engine and move the machine back as far as necessary to be able to set down the next segment on the drum from above.

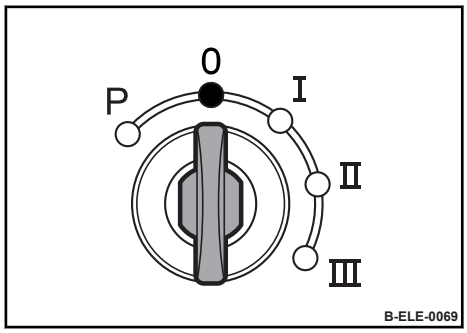

Fig. 230

11. Turn the ignition key to position “0” and pull it out.

3. Segment

CAUTION!

Danger of crushing when positioning the individual segments!

– Never put your hands between the segment and drum or machine parts.

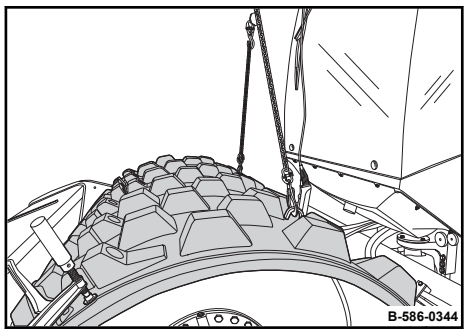

Fig. 231

12. Lift the third segment using suitable lifting tackle, position on the drum and set down.
13. Loosely connect the segments using screws of length M20 x 130 (4 to 5 thread turns).

Tightening segments 1 and 3

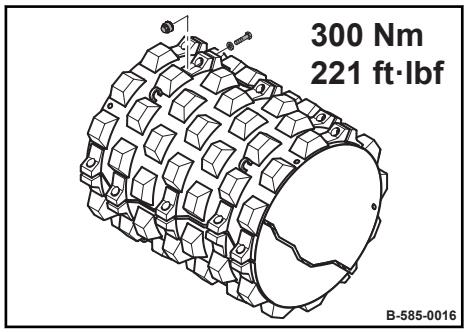

Fig. 232

14. Replace screws of length M20 x 130 with length M20 x 80 and tighten using tightening torque: 300 Nm (221 ft·lbf).
15. Start the engine and move the machine forward as far as necessary to allow the screws in the next segment to be replaced and tightened.

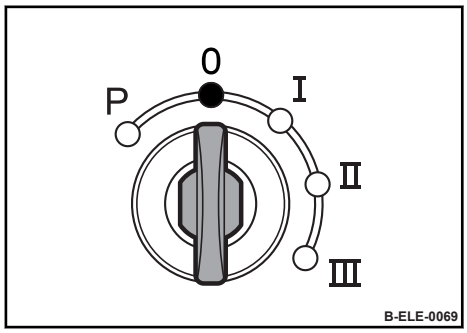

Fig. 233

16. Turn the ignition key to position “0” and pull it out.

Tightening segments 2 and 3

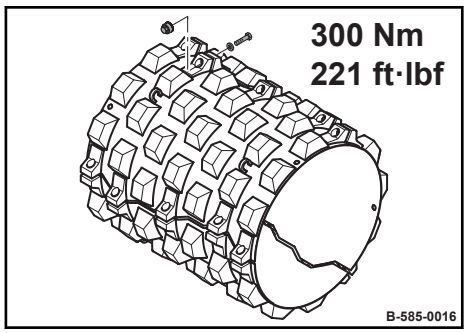

Fig. 234

17. Replace screws of length M20 x 130 with length M20 x 80 and tighten using tightening torque: 300 Nm (221 ft·lbf).
18. Start the engine and move the machine forward as far as necessary to allow the screws in the next segment to be replaced and tightened.

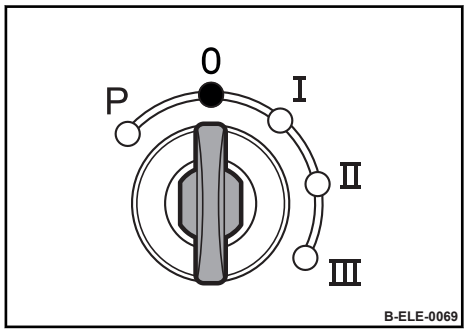

Fig. 235

19. Turn the ignition key to position “0” and pull it out.

Tightening segments 1 and 2

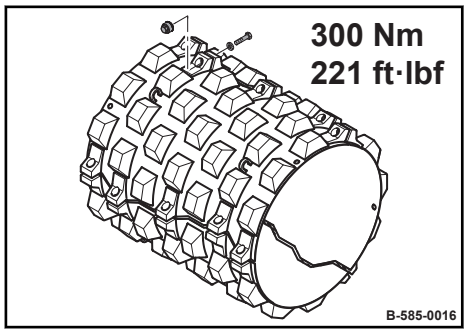

Fig. 236

20. Replace screws of length M20 x 130 with length M20 x 80 and tighten using tightening torque: 300 Nm (221 ft·lbf).
21. Start the engine and test drive for approx. two minutes with vibration.

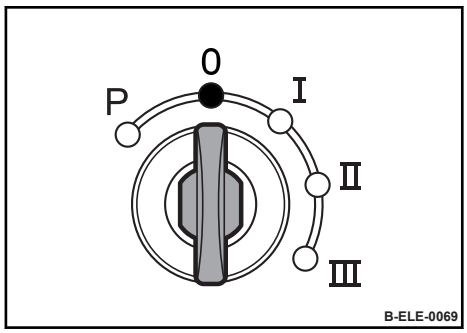

Fig. 237

22. Turn the ignition key to position “0” and pull it out.
23. Retighten all fastening screws.
24. After approx. 60 minutes work, retighten all fastening screws again.

9.1.5 Attaching the scrapers

Protective equipment:

- Working clothes
- Safety shoes
- Protective gloves

Front scraper

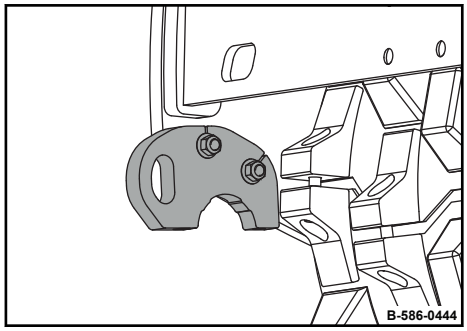

Fig. 238

1. Screw on the upper half shells of the front scraper on both sides.

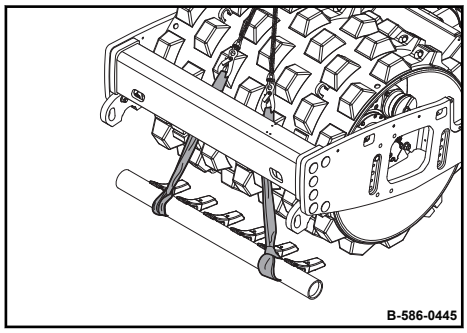

Fig. 239

2. Position the scraper in front of the drum.
3. Attach the lifting tackle to the front scraper as perpendicularly as possible and secure with suitable lifting tackle.
4. Carefully lift the scraper until it is in the upper half shells.

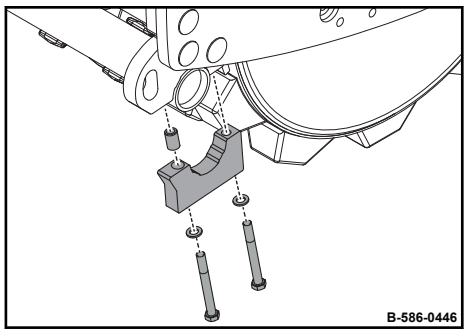

Fig. 240

5. Attach the lower half shells, insert the screws with copper paste (OKS 240, BOMAG 009 700 03) and secure them.

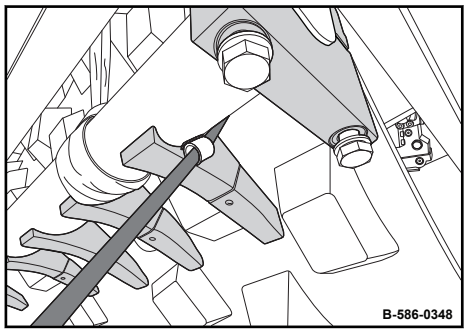

Fig. 241

6. Slide the scraper onto the drum leaving approx. 25 mm (1 in).
7. Tighten the screws on the half shells using tightening torque: 463 Nm (341 ft·lbf).

Rear scraper

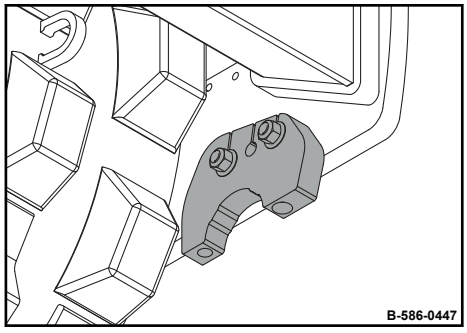

Fig. 242

8. Screw on the upper half shells of the rear scraper on both sides.

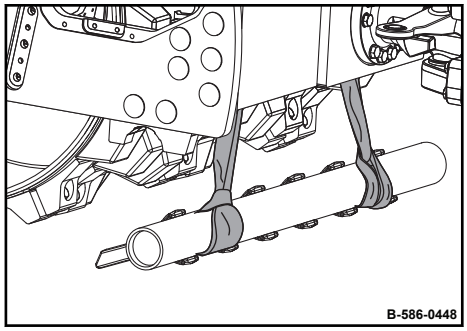

Fig. 243

9. Position the scraper in front of the drum.

10.

> **NOTICE!**
>
> **Components may get damaged!**
>
> – Make sure no components of the driver's stand get damaged.
> – Particularly in the case of machines with cabs, make sure that the windows do not get damaged.
>
> If necessary, protect the window (e.g. with a board).

Attach the lifting tackle to the rear scraper as perpendicularly as possible and secure with suitable lifting tackle.

11. Carefully lift the scraper until it is in the upper half shells.

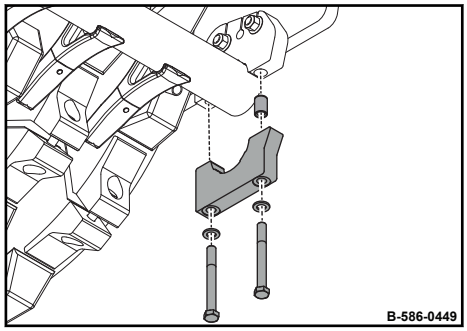

Fig. 244

12. Attach the lower half shells, insert the screws with copper paste (OKS 240, BOMAG 009 700 03) and secure them.

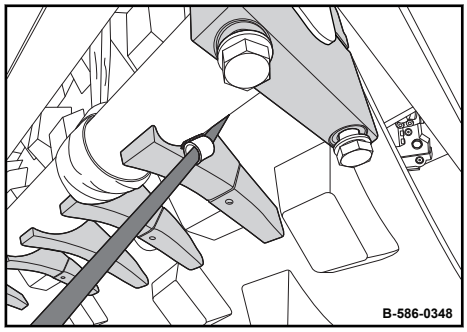

Fig. 245

13. Slide the scraper onto the drum leaving approx. 25 mm (1 in).

14. Tighten the screws on the half shells using tightening torque: 463 Nm (341 ft·lbf).

9.2 Removing the padfoot shells

9.2.1 Preliminary remarks and safety notes

Loads are only to be attached and hoisted by an expert/qualified person.

Do not use lifting points that are damaged or impaired in any other way.

Only use lifting and lashing tackle with sufficient load bearing capacity for the weight to be loaded.

Always use appropriate lifting and lashing tackle at the lifting and lashing points.

Use lifting tackle only in the specified loading direction.

When lifting the machine, avoid uncontrolled movements of the load. If necessary, hold the load with guide ropes.

At least two people are required when attaching and detaching the segments.

9.2.2 Preparations

Protective equipment:

- Working clothes
- Safety shoes
- Protective gloves

1. Drive the machine onto level, firm ground.

> *Make sure there is sufficient space to drive the machine for at least one full turn of the drum.*

2. Apply the parking brake.

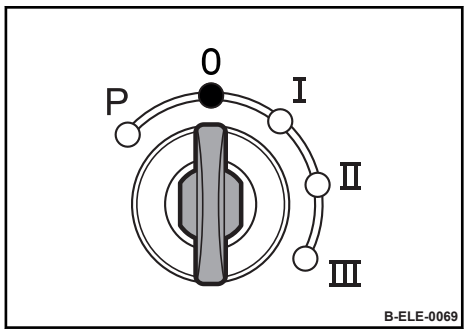

Fig. 246

3. Turn the ignition key to position “0” and pull it out.

9.2.3 Removing the scrapers

Protective equipment:

- Working clothes
- Safety shoes
- Protective gloves

Front scraper

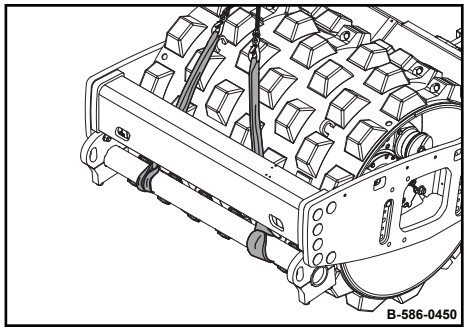

Fig. 247

1. Attach the lifting tackle to the front scraper as perpendicularly as possible and secure with suitable lifting tackle.

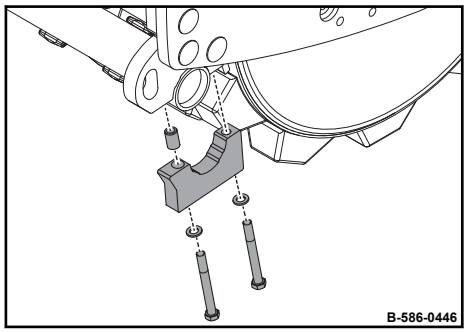

Fig. 248

2. Remove both lower half shells on both sides.

3. Lower the front scraper to the ground or onto a pallet and pull it out from under the machine.

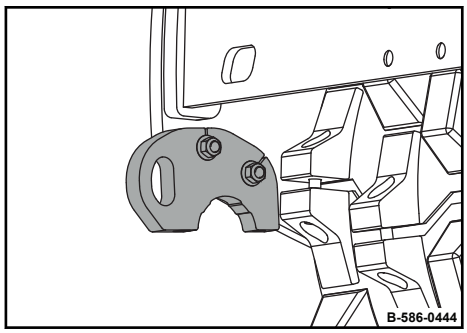

Fig. 249

4. Unscrew both upper half shells on both sides.

Rear scraper

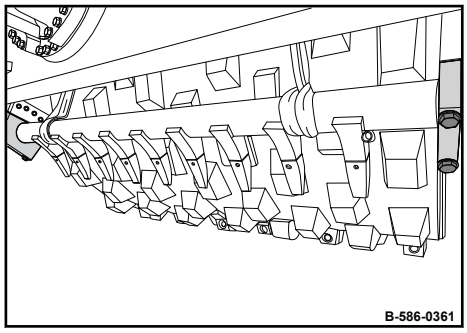

Fig. 250

5.

NOTICE!

Components may get damaged!

- Make sure no components of the driver's stand get damaged.
- Particularly in the case of machines with cabs, make sure that the windows do not get damaged.

  If necessary, protect the window (e.g. with a board).

Attach the lifting tackle to the rear scraper as perpendicularly as possible and secure with suitable lifting tackle.

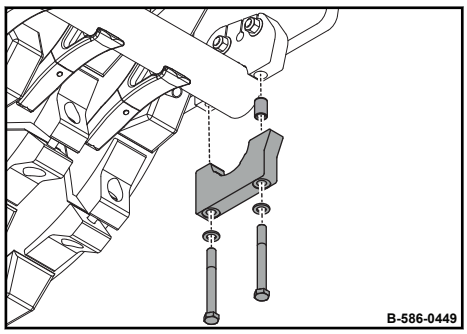

Fig. 251

6. Remove both lower half shells on both sides.
7. Lower the rear scraper to the ground or onto a pallet and pull out from under the machine.

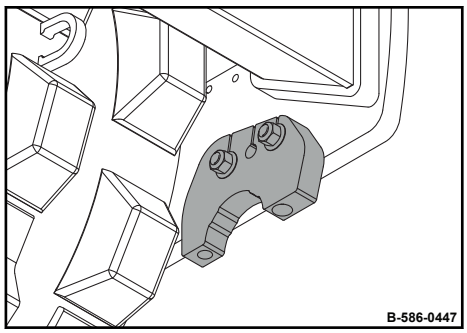

Fig. 252

8. Unscrew both upper half shells on both sides.

9.2.4 Removing segments

Protective equipment:

- Working clothes
- Safety shoes
- Protective gloves
- Safety goggles

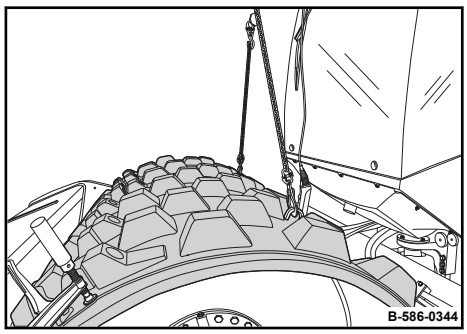

Fig. 253

1. Attach suitable lifting tackle to the lifting eyes of the first segment.
2. Secure the segment with suitable lifting tackle.
3. **CAUTION!**
   Danger of eye injuries caused by particles flying around!
   – Wear your personal protective equipment (safety gloves, protective working clothes, goggles).

   Sever the fastening screws from the segments using a flame cutter or cutting disc.

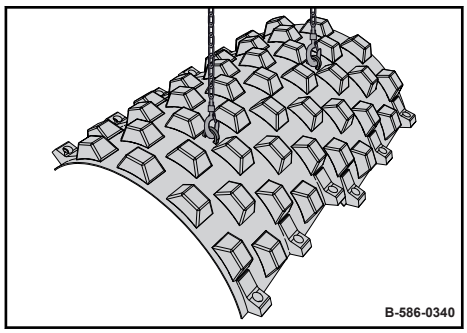

Fig. 254

4. Lift the segment and set aside safely.
5. Start the engine and move the machine back as far as necessary to attach lifting tackle to the next segment.

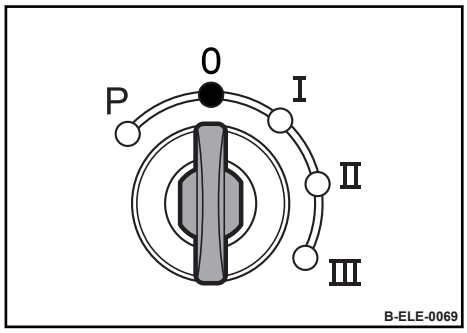

Fig. 255

6. Turn the ignition key to position “0” and pull it out.

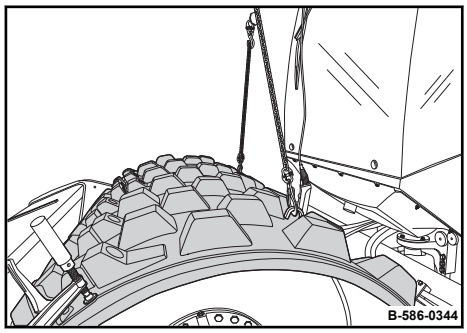

Fig. 256

7. Attach suitable lifting tackle to the lifting eyes of the second segment.
8. Secure the segment with suitable lifting tackle.
9. Sever the fastening screws from the segments using a flame cutter or cutting disc.

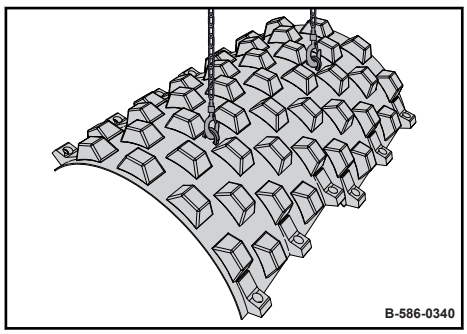

Fig. 257

10. Lift the segment and set aside safely.

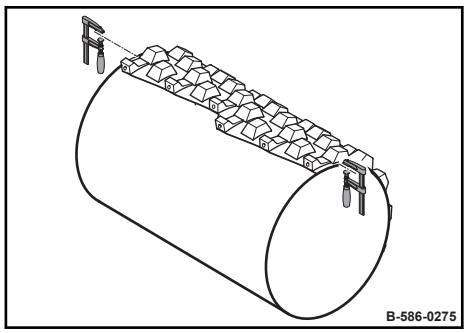

Fig. 258

11. Fix the third segment to the drum both right and left with a vice.
12. Start the engine and move the machine back as far as necessary to attach lifting tackle to the next segment.

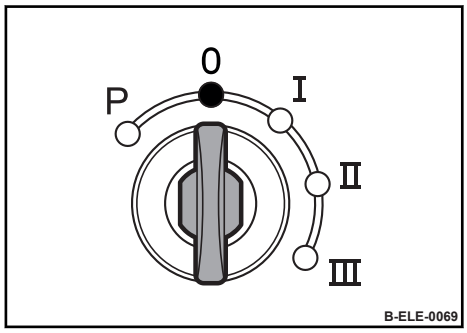

Fig. 259

13. Turn the ignition key to position “0” and pull it out.

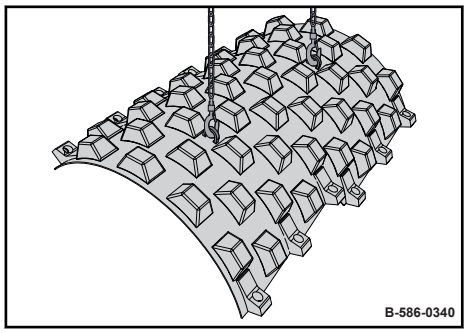

Fig. 260

14. Attach suitable lifting tackle to the lifting eyes of the third segment.
15. Secure the segment with suitable lifting tackle.
16. Undo the vices.
17. Lift the segment and set aside safely.

9.2.5 Attaching the scrapers

Protective equipment:

- Working clothes
- Safety shoes
- Protective gloves

Front scraper

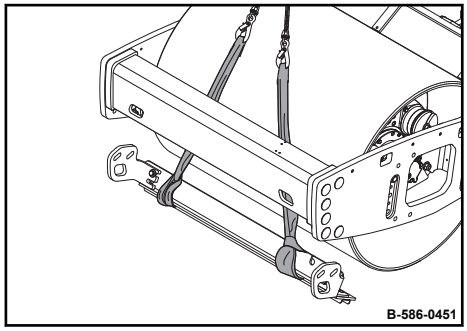

Fig. 261

1. Position the front scraper in front of the drum.
2. Attach the lifting tackle to the front scraper as perpendicularly as possible and secure with suitable lifting tackle.
3. Carefully lift the scraper until it is in installation position.

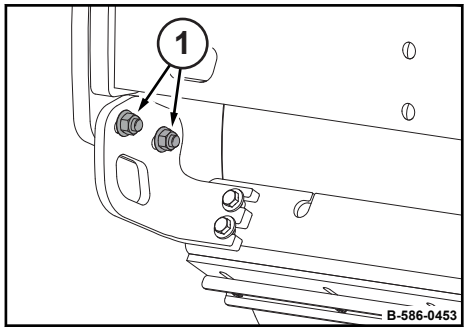

Fig. 262

4. Insert the fastening screws on both sides, screw the nuts (1) on and tighten them.

Rear scraper

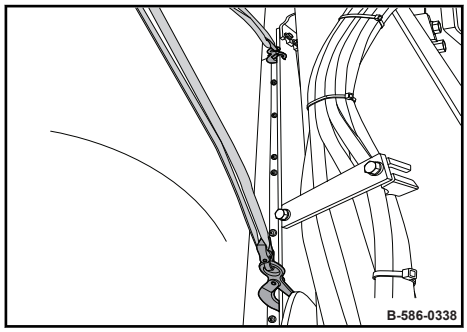

Fig. 263

5. Position the rear scraper behind the drum.

6.

NOTICE!

Components may get damaged!

- Make sure no components of the driver's stand get damaged.
- Particularly in the case of machines with cabs, make sure that the windows do not get damaged.
  If necessary, protect the window (e.g. with a board).

Attach the lifting tackle to the rear scraper as perpendicularly as possible and secure with suitable lifting tackle.

7. Carefully lift the scraper until it is in installation position.

8. Insert the fastening screws on both sides, screw the nuts (1) on and tighten them.

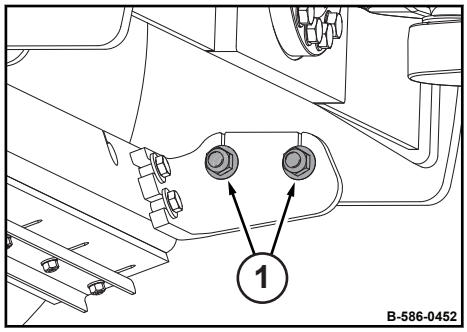

Fig. 264

10 Troubleshooting

10.1 Preliminary remarks

Malfunctions are frequently caused by incorrect operation of the machine or insufficient maintenance. Whenever a fault occurs you should therefore thoroughly read these instructions on correct operation and maintenance.

If you cannot locate the cause of a fault or rectify it yourself by following the trouble shooting chart, you should contact our customer service department.

10.2 Starting the engine with jump leads

NOTICE!

A wrong connection will cause severe damage in the electric system.

– Bridge the machine only with a 12 Volt auxiliary battery.

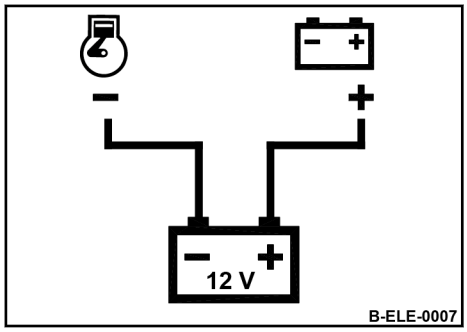

Fig. 265

1. Connect the plus pole of the external battery first with the plus pole of the vehicle battery using the first jump lead.
2. Then connect the second battery cable first to the minus pole of the current supplying auxiliary battery and then to engine or chassis ground, as far away from the battery as possible.
3. Start the engine *Chapter 6.3 'Starting the engine' on page 114*.

NOTICE!

Danger of damage to the electronic system!

If no powerful consuming device is switched on, voltage peaks may occur when separating the connecting cables between the batteries, which could damage electrical components.

4. Once the engine is running switch on a powerful consumer (working light, etc.).
5. After starting disconnect the negative poles first and the positive poles after.
6. Switch off the consumer.

10.3 Fuse assignment

10.3.1 Notes on safety



WARNING!
Danger of injury by fire in the machine!
– Do not use fuses with higher ampere ratings and do not bridge fuses.

10.3.2 Central electrics

The central electrics are located at the right under the driver's seat.

Fuse	Amperage	Designation
F05	20 A	12-V socket
F07	10 A	Hazard light
F08	10 A	Direction indicators
F09	10 A	Parking and tail light, left
F10	10 A	Parking and tail light, right
F11	15 A	Head lights, front
F13	15 A	Starter switch
F19	15 A	Working head lights, front
F22	15 A	Working head lights, rear
F23	15 A	Warning horn
F24	10 A	Instrument cluster
F29	15 A	Compressor - air suspended seat, seat heating
F39	80 A	Main fuse for cabin
F40	30 A	Heating, air conditioning, fan
F67	15 A	Control (potential 30)

Fuse	Amperage	Designation
F68	15 A	Reserve (potential 30)
F84	10 A	Control (contact 54)
F91	5 A	Sensors
F95	30 A	Engine control unit
F103	15 A	Reserve (potential 15)
F122	10 A	Engine control unit
F124	25 A	Fuel pre-heating
F146	15 A	Control (potential 30)
F148	10 A	Control (potential 15)
F157	30 A	Starter
F169	5 A	Start current
F243	7.5 A	BOMAG TELEMATIC (potential 30)
F244	5 A	BOMAG TELEMATIC (potential 15)
F268	20 A	Fuel pump
FM1	1 A	Sensors
FM2	1 A	Sensors

10.3.3 Main fuses

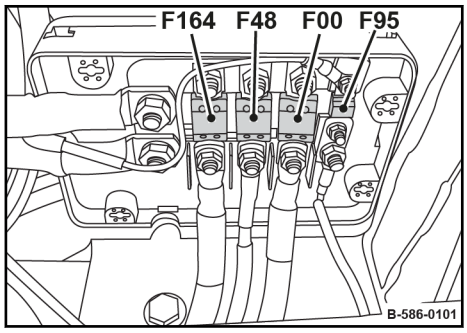

The main fuse box is located in the engine compartment.

Fig. 266

Fuse	Amperage	Designation
F164	125 A	(B+) charge line
F48	40 A	Preheating system
F00	125 A	Main fuse (potential 30)
F95	30 A	Engine control unit

10.3.4 Control console cabin

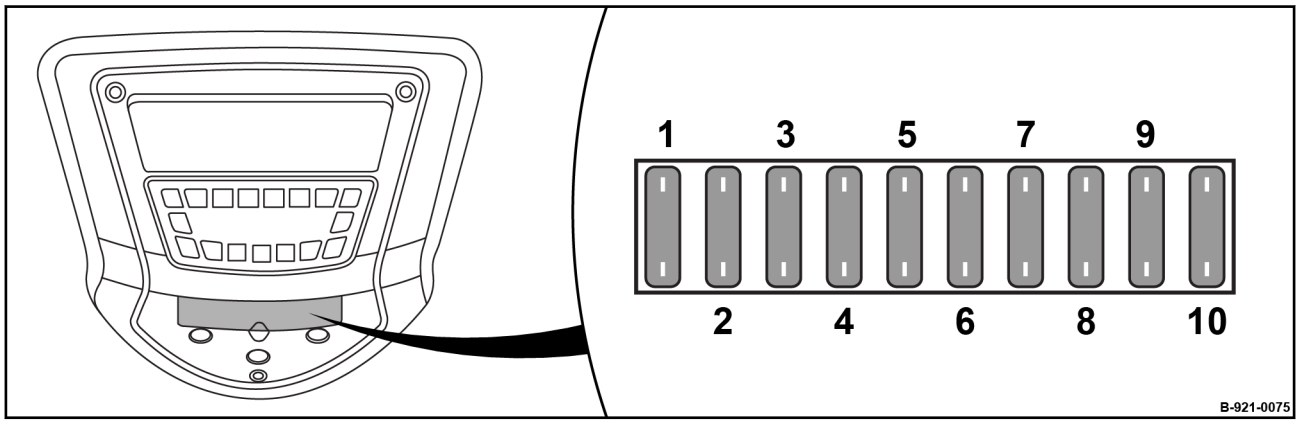

Fig. 267

Posi-tion	Fuse	Amperage	Designation
1	F17	5 A	Radio
2	F264	10 A	BCM
3	F271	10 A	BCM net
4	F150	5 A	GPS
5	F266	10 A	Radio/Tachograph
6	F143	20 A	Rear windscreen heating
7	F28	15 A	Rear windscreen wiper
8	F27	15 A	Front windscreen wiper
9	F279	15 A	Spare
10	F272	5 A	Control console cabin

10.4 Fault code display

If the warning buzzer sounds and the central warning light lights up or flashes, read out the fault code and inform our Customer Service Department.

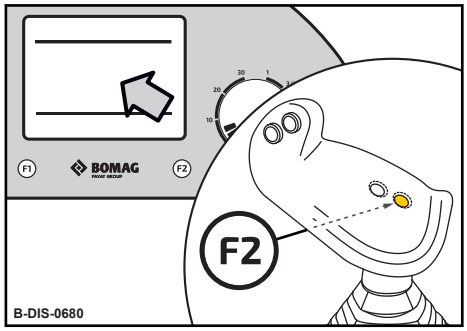

Fig. 268

1. Press the *[F2]* button on the travel lever until the *'fault code display'* appears.

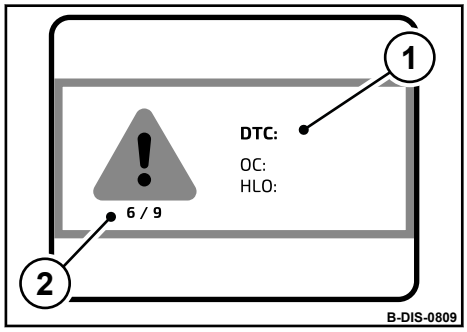

Fig. 269

2. Read out and note the fault code (1).
3. If necessary, read out and note further fault codes.
   ⇨ If there are other incoming fault codes, these will also be shown in the INFO 2 display field (2).

   In this case, the display will automatically switch to the next fault code after approx. 4 seconds.
4. Inform our Customer Service Department.

10.5 Engine faults

Fault	Possible cause	Remedy
Engine does not start	Fuel tank empty	Refuel, bleed the fuel system
	Fuel filter clogged, in winter due to paraffin separation	Change the fuel filter, use winter fuel
	Fuel lines leaking	Check all line connections for leaks and tighten the fittings, bleed the fuel system
	Battery not charged or not connected	Tighten the terminal clamps on the battery, check all cable connections.
	Starter defective	Have examined by a specialist
Poor starting of engine or engine works irregularly with poor power	Battery power too low, terminal clamps loose or oxidized causing the starter to turn too slowly	Check the battery charge condition, clean the terminal clamps, tighten and cover them with acid-free grease
	Fuel supply too low, fuel system clogged by paraffin separation during winter	Replacing the fuel filter Check all line connections for leaks and tighten the fittings, bleed the fuel system Use winter fuel in winter
	Engine oil with wrong SAE viscosity class	Change the engine oil
	Air filter dirty	Clean, replace if necessary
	Turbo charger defective	Have examined by a specialist
Excessive exhaust smoke	Engine oil level too high	Check, drain off if necessary
	Air filter dirty	Clean, replace if necessary
	Poor compression because of burned or broken compression rings	Have examined by a specialist

Fault	Possible cause	Remedy
Engine overheating, engine must be shut down immediately!	Cooling fins on radiator are extremely dirty (the warning lamp for engine oil temperature lights)	Clean the cooling fins
	Engine oil level too low	Check, fill up if necessary
	Lack of coolant	Check all pipes and hoses for good condition and leak tightness Check the coolant level, top up if necessary. Do not use radiator sealant to seal leaks
	Anti-freeze concentration too high	Use coolant with the specified mixing ratio
	Thermostat defective	Check the thermostat, replace if necessary
	Interior parts of radiator corroded	Clean or replace the radiator
	Insufficient cooling air supply to the cooling fan	Remove any clogging from the cooling air duct
	Fan, radiator or radiator cap defective	Have examined by a specialist
Engine has insufficient engine oil pressure (engine oil pressure warning lamp lights)	Engine oil level too low	Check, fill up if necessary

Fault	Possible cause	Remedy
The charge control light lights during operation, the warning buzzer sounds	Generator speed too low	Check the generator belt for tension, replace the belt if necessary
	Generator or regulator defective	Have examined by a specialist

11 Disposal

11.1 Final shut-down of machine

After the machine has reached the end of its service life, the individual components of the machine must be disposed of properly.

Observe national regulations!

Carry out the following work and have the machine dismantled by a state-approved recycling company.



WARNING!

Health hazard caused by fuels and lubricants!

– Safety regulations and environmental protection regulations must be followed when handling fuels and lubricants ↬ *Chapter 3.4 ‘Handling fuels and lubricants’ on page 32*.

Protective equipment:

- Working clothes
- Safety shoes
- Protective gloves
- Safety goggles

1. Remove the batteries.
2. Empty the fuel tank.
3. Drain the hydraulic oil tank.
4. Drain the coolant from the cooling system and engine.
5. Drain off engine oil.
6. Drain off gear oil.

12 List of special tools

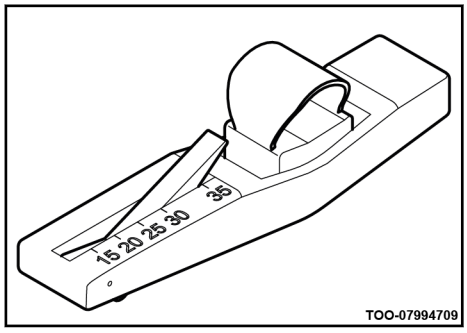

Fig.

Belt tension tester
BOMAG No. 079 947 09

Head Office/Hauptsitz
BOMAG
Hellerwald
D-56154 Boppard
Germany
Telefon: +49 6742 100-0
Fax: +49 6742 3090
e-mail: info@bomag.com

BOMAG
Niederlassung Berlin
Gewerbestraße 3
15366 Hoppegarten
GERMANY
Tel.: +49 3342 369410
Fax: +49 3342 369436
e-mail: nlberlin@bomag.com

BOMAG
Niederlassung Boppard
Hellerwald
56154 Boppard
GERMANY
Tel.: +49 6742 100360
Fax: +49 6742 100392
e-mail: nlboppard@bomag.com

BOMAG
Niederlassung Chemnitz
Querstraße 6
09247 Chemnitz
GERMANY
Tel.: +49 3722 51590
Fax: +49 3722 515951
e-mail: nlchemnitz@bomag.com

BOMAG
Niederlassung Hannover
Dieselstraße 44
30827 Garbsen-Berenbostel
GERMANY
Tel.: +49 5131 70060
Fax: +49 5131 6766
e-mail: nlhannover@bomag.com

BOMAG
Niederlassung München
Otto-Hahn-Ring 3
85301 Schweitenkirchen
GERMANY
Tel.: +49 8444 91840
Fax: +49 8444 918420
e-mail: nlmuenchen@bomag.com

BOMAG
Niederlassung Stuttgart
Uferstraße 22
73630 Remshalden-Grunbach
GERMANY
Tel.: +49 7151 986293
Fax: +49 7151 9862959
e-mail: nlstuttgart@bomag.com

BOMAG Maschinenhandelsgesellschaft m.b.H.
Klausenweg 654
2534 Alland
AUSTRIA

Tel.: +43 2258 20202
Fax: +43 2258 20202-20
e-mail: austria@bomag.com

BOMAG MARINI EQUIPAMENTOS LTDA
Rua Comendador Clemente Cifali, 530
Distrito Industrial Ritter
Cachoeirinha – RS
BRAZIL
ZIP code 94935-225
Tel.: +55 51 2125-6677
Fax: +55 51 3470-6220
e-mail: brasil@bomag.com

BOMAG (CANADA), INC.
3455 Semenyk Court
Missisauga, Ontario
L5C 4P9
CANADA

Tel.: +1 905 361 9961
Fax: +1 905 361 9962
e-mail: canada@bomag.com

BOMAG (China) Construction
Machinery Co. , Ltd
No. 2808, West Huancheng Road,
Shanghai Comprehensive Industrial
Zone Fengxian Shanghai 201401
CHINA
Tel.: +86 21 3365 5566
Fax: +86 21 3365 5508
e-mail: china@bomag.com

BOMAG France S.A.S.
2, avenue du Général de Gaulle
91170 VIRY-CHATILLON
FRANCE

Tel.: +33 1 69578600
Fax: +33 1 69962660
e-mail: france@bomag.com

BOMAG (GREAT BRITAIN), LTD
Sheldon Way, Larkfield
Aylesford
Kent ME20 6SE
GREAT BRITAIN

Tel.: +44 1622 716611
Fax: +44 1622 710233
e-mail: gb@bomag.com

BOMA Equipment Hong Kong LTD
Room 1003, 10/F Charm Centre
700, Castle Peak Road
Kowloon,
HONG KONG
Tel.: +852 2721 6363
Fax: +852 2721 3212
e-mail: bomahk@bomag.com

BOMAG Italia Srl.
Via Roma 50
48011 Alfonsine
ITALY

Tel.: +39 0544 864235
Fax: +39 0544 864367
e-mail: italy@bomag.com

FAYAT BOMAG Polska Sp. z.o.o.
Ul. Szyszkowa 52
02-285 Warzawa
POLAND

Tel.: +48 22 4820400
Fax: +48 22 4820401
e-mail: poland@bomag.com

FAYAT BOMAG Rus OOO
Klyazma block, h 1-g
141400 Khimki, Moscow region
RUSSIA

Tel.: +7 (495) 2879290
Fax: +7 (495) 2879291
e-mail: russia@bomag.com

BOMAG GmbH, Singapore
300, Beach Road
The Concourse, , 18-06
Singapore 199555
SINGAPORE
Tel.: +65 294 1277
Fax: +65 294 1377
e-mail: singapore@bomag.com

BOMAG Americas, Inc.
125 Blue Granite Parkway
Ridgeway SC 29130
U.S.A.

Tel.: +1 803 3370700
Fax: +1 803 3370800
e-mail: usa@bomag.com