Sospeso - Per gru a torre*
*Suspended - For tower crane**

* Tetto Amovibile - *Roof Removable*

		Kg	MAX	
FTB 2 500	1000x1400x2200 mm	350 Kg	300 Kg	2

In conformità EN 14502-1-2010 - *According EN 14502-1-2010*

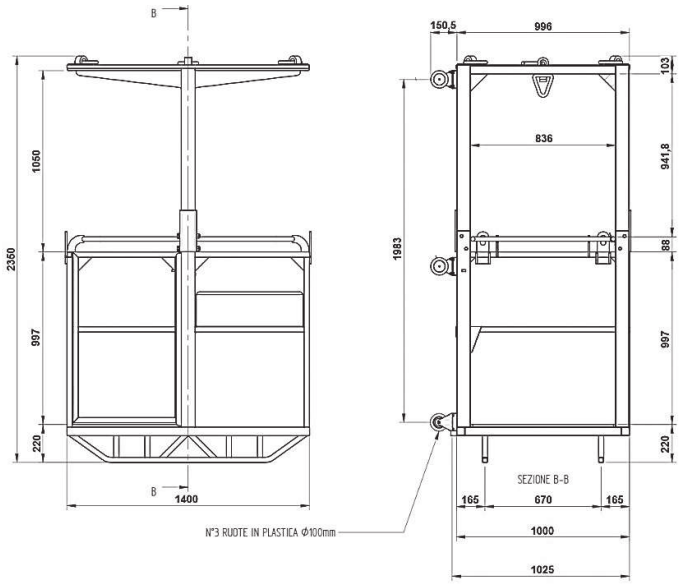

Sospeso - Per gru a torre*
*Suspended - For tower crane**

* Tetto Amovibile - *Roof Removable*

		Kg	MAX	
FTB 3 550	1000x1600x2300 mm	495 Kg	450 Kg	3
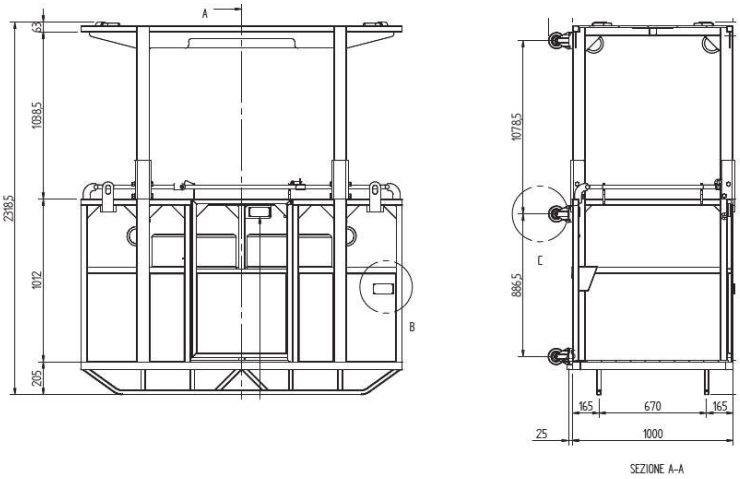
In conformità EN 14502-1-2010 - *According EN 14502-1-2010*